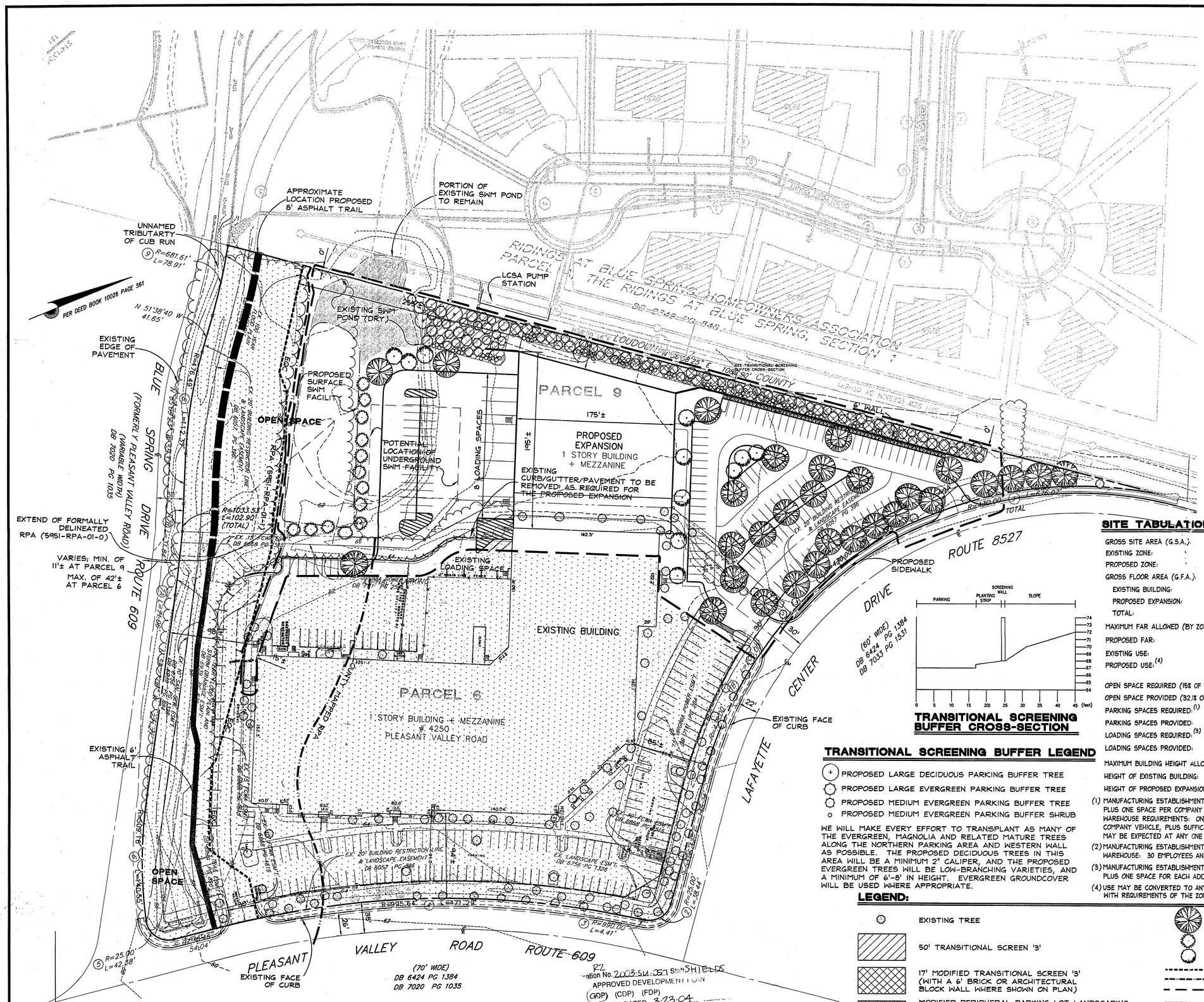

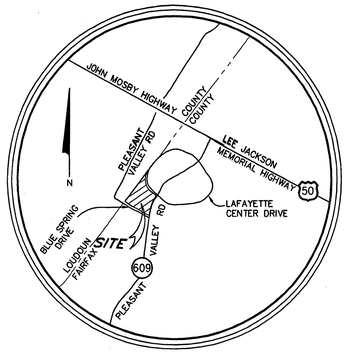

VICINITY MAP

SCALE: 1" = 2,000'

CURVE TABLE

CURVE	RADIUS	LENGTH	TANGENT	CHORD	BEARING	DELTA
1	430.00'	676.07'	430.63'	608.56'	S 08°04'06" E	90°05'02"
1A	430.00'	471.07'	262.31'	447.87'	S 05°35'22" W	62°46'06"
1B	430.00'	205.00'	104.49'	203.06'	S 39°27'09" E	27°18'56"
2	25.00'	38.44'	24.18'	34.76'	S 09°03'38" E	88°05'57"
3	990.00'	4.41'	2.20'	4.41'	S 34°51'41" W	0°15'18"
4	995.64'	471.29'	240.14'	466.90'	S 21°10'24" W	27°07'16"
5	25.00'	42.38'	28.32'	37.48'	S 56°10'20" W	97°07'08"
6	509.16'	140.55'	70.73'	140.11'	N 67°21'36" W	15°49'00"
7	1033.53'	102.90'	51.49'	102.86'	N 62°18'14" W	5°42'17"
7A	1033.53'	71.06'	35.54'	71.05'	N 61°25'17" W	3°56'22"
7B	1033.53'	31.84'	15.92'	31.84'	N 64°16'26" W	1°45'55"
8	476.49'	112.37'	56.45'	112.11'	N 59°24'02" W	13°30'43"
9	681.61'	78.91'	39.50'	78.86'	N 54°57'39" W	6°37'59"

SITE TABULATIONS:

GROSS SITE AREA (G.S.A.):	455,467 s.f.± or 10.4561 Ac.±
EXISTING ZONE:	I-3
PROPOSED ZONE:	I-4
GROSS FLOOR AREA (G.F.A.):	
EXISTING BUILDING:	93,600 s.f.
PROPOSED EXPANSION:	40,000 s.f. MAX.
TOTAL:	133,600 s.f. MAX.
MAXIMUM FAR ALLOWED (BY ZONING ORDINANCE):	0.50
PROPOSED FAR:	0.29 MAX.
EXISTING USE:	MANUFACTURING ESTABLISHMENT
PROPOSED USE:(4)	MANUFACTURING ESTABLISHMENT AND WAREHOUSE
OPEN SPACE REQUIRED (15% OF G.S.A.):	68,320 s.f.± or 1.57 Ac.±
OPEN SPACE PROVIDED (32.1% OF G.S.A.):	146,200 s.f.± or 3.36 Ac.±
PARKING SPACES REQUIRED:(1)	305 SPACES(2)
PARKING SPACES PROVIDED:	305 SPACES
LOADING SPACES REQUIRED:(3)	5 LOADING SPACES
LOADING SPACES PROVIDED:	9 LOADING SPACES
MAXIMUM BUILDING HEIGHT ALLOWED:	75'
HEIGHT OF EXISTING BUILDING:	26'
HEIGHT OF PROPOSED EXPANSION:	28' MAX.

(1) MANUFACTURING ESTABLISHMENT REQUIREMENTS: ONE SPACE PER ONE EMPLOYEE ON MAJOR SHIFT, PLUS ONE SPACE PER COMPANY VEHICLE AND PIECE OF MOBILE EQUIPMENT.
WAREHOUSE REQUIREMENTS: ONE SPACE PER 1.5 EMPLOYEES ON MAJOR SHIFT, PLUS ONE SPACE PER COMPANY VEHICLE, PLUS SUFFICIENT SPACE TO ACCOMMODATE THE LARGEST NUMBER OF VISITORS THAT MAY BE EXPECTED AT ANY ONE TIME BUT, WITH A MINIMUM OF ONE SPACE PER 1,000 s.f. OF G.F.A..

(2) MANUFACTURING ESTABLISHMENT: 250 EMPLOYEES AND 15 COMPANY VEHICLES = 265 SPACES
WAREHOUSE: 30 EMPLOYEES AND 0 VEHICLES OR VISITORS = 20 SPACES OR 40,000 s.f. G.F.A. = 40 SPACES

(3) MANUFACTURING ESTABLISHMENT AND WAREHOUSE REQUIREMENTS: ONE SPACE FOR THE FIRST 5,000 s.f. OF G.F.A., PLUS ONE SPACE FOR EACH ADDITIONAL 30,000 s.f. OR MAJOR FRACTION THEREOF.

(4) USE MAY BE CONVERTED TO ANY ALLOWED IN I-4 ZONING DISTRICT PROVIDED THAT PARKING IS IN ACCORDANCE WITH REQUIREMENTS OF THE ZONING ORDINANCE.

TRANSITIONAL SCREENING BUFFER CROSS-SECTION

TRANSITIONAL SCREENING BUFFER LEGEND

- (+) PROPOSED LARGE DECIDUOUS PARKING BUFFER TREE
- PROPOSED LARGE EVERGREEN PARKING BUFFER TREE
- PROPOSED MEDIUM EVERGREEN PARKING BUFFER TREE
- o PROPOSED MEDIUM EVERGREEN PARKING BUFFER SHRUB

WE WILL MAKE EVERY EFFORT TO TRANSPLANT AS MANY OF THE EVERGREEN, MAGNOLIA AND RELATED MATURE TREES ALONG THE NORTHERN PARKING AREA AND WESTERN WALL AS POSSIBLE. THE PROPOSED DECIDUOUS TREES IN THIS AREA WILL BE A MINIMUM 2" CALIPER, AND THE PROPOSED EVERGREEN TREES WILL BE LOW-BRANCHING VARIETIES, AND A MINIMUM OF 6'-8' IN HEIGHT. EVERGREEN GROUNDCOVER WILL BE USED WHERE APPROPRIATE.

LEGEND:

- EXISTING TREE
- 50' TRANSITIONAL SCREEN '3'
- 17' MODIFIED TRANSITIONAL SCREEN '3' (WITH A 6' BRICK OR ARCHITECTURAL BLOCK WALL WHERE SHOWN ON PLAN)
- MODIFIED PERIPHERAL PARKING LOT LANDSCAPING (SHRUBS PLANTED IN FRONT OF THE WALL ON THE PARKING LOT SIDE AND THE REQUIRED TREES PLANTED IN THE TRANSITIONAL SCREEN)
- EXISTING TREELINE
- PROPOSED LARGE DECIDUOUS TREE
- PROPOSED EVERGREEN TREE
- PROPOSED SMALL OR COMPACT DECIDUOUS TREE
- COUNTY MAPPED EQC
- COUNTY MAPPED RPA
- APPROXIMATE LIMITS OF CLEARING AND GRADING (SEE GENERAL NOTE 13 ON SHEET 2)
- EXISTING CONDITIONS WITHIN THE APPLICATION AREA THAT WILL NOT CHANGE (SEE GENERAL NOTE 6 ON SHEET 2 FOR TRAIL CONSTRUCTION INFORMATION IN THE EQC/RPA/FLOODPLAIN AND GENERAL NOTE 13 FOR UTILITY EXTENSIONS/RELOCATIONS)
- PROPOSED TREELINE

RECEIVED
Department of Planning & Zoning
MAR 16 2004
Zoning Evaluation Division

Application No. 2003-SU-057 Sheet SHIELDS
APPROVED DEVELOPMENT PLAN
(GDP) (CDP) (FDP)
PROFFERS DATED 3-23-04
(BOS) (PC) approval 5-24-04
1 of 2

BC Consultants
Planners · Engineers · Surveyors · Landscape Architects
12600 Fair Lakes Circle, Suite 100, Fairfax, VA 22033
(703)449-8100, (703)449-8108 (Fax)
www.bccon.com

COMMONWEALTH OF VIRGINIA
PETER L. RINEK
388
3/15/04
CERTIFIED LANDSCAPE ARCHITECT

GENERALIZED DEVELOPMENT PLAN

LAFAYETTE BUSINESS CENTER

SULLY DISTRICT
FAIRFAX COUNTY, VIRGINIA

BC REVISIONS	
REVISED 10-4-03	
REVISED 02-25-04	
REVISED 03-15-04	
OWNER SIGN SHEET 2 FOR OWNER'S INFORMATION	

DESIGNED BY:	DDD
DRAFTED BY:	CAD
CHECKED BY:	PLR
DATE:	JULY, 2003
SCALE:	HOR. 1"= 50' VERT.N/A
SHEET 1 OF 2	
CO. NO.	
CAD NAME:	G3012GDP.DWG
LAYOUT:	GDP
FILE NO.	03012.01.06.0

XREFS: G3012BAS

GENERAL NOTES:

1. THE PROPERTIES DELINEATED ON THIS GENERALIZED DEVELOPMENT PLAN (GDP) ARE LOCATED ON FAIRFAX COUNTY TAX ASSESSMENT MAP #033-2 ((4)) PARCELS 6 AND 9 AND ARE ZONED I-3.

2. THE BOUNDARY INFORMATION SHOWN HEREON IS COMPILED FROM DEEDS OF RECORD AND ADJACENT INFORMATION AND DOES NOT REPRESENT A FIELD RUN BOUNDARY SURVEY. NO TITLE REPORT WAS FURNISHED.

3. THE TOPOGRAPHIC INFORMATION SHOWN HEREON FOR PARCEL 9 IS COMPILED FROM A FIELD RUN TOPOGRAPHIC SURVEY PERFORMED BY BC CONSULTANTS IN MARCH 2003. THE TOPOGRAPHIC INFORMATION SHOWN HEREON FOR PARCEL 6 IS FROM INFORMATION OF RECORD FOR A FIELD RUN TOPOGRAPHIC SURVEY PERFORMED BY KIDDE CONSULTANTS IN MARCH 1987. THE TOPOGRAPHY IS SHOWN AT A TWO FOOT CONTOUR INTERVAL. THE BC CONSULTANTS ASSUME NO RESPONSIBILITY FOR DESIGN OR CONSTRUCTION CHANGES DUE TO INACCURACIES IN TOPOGRAPHIC INFORMATION SHOWN HEREON.

4. THE PROPERTIES DELINEATED ON THIS GDP ARE IN THE SULLY MAGISTERIAL DISTRICT, THE UPPER CUB RUN (T-I) SANITARY SEWER DISTRICT AND THE CUB RUN WATERSHED.

5. TO THE BEST OF OUR KNOWLEDGE, THIS DEVELOPMENT IS IN CONFORMANCE WITH THE FAIRFAX COUNTY COMPREHENSIVE PLAN AND WILL CONFORM TO THE PROVISIONS OF ALL APPLICABLE ORDINANCES, REGULATIONS AND ADOPTED STANDARDS AND CONDITIONS WITH THE EXCEPTION OF THE FOLLOWING:
   * MODIFICATION AND/OR WAIVER OF ALL TRANSITIONAL SCREENING AND BARRIER REQUIREMENTS TO THAT AS SHOWN ON THE PLAN IN ACCORDANCE WITH THE PROVISIONS OF ARTICLE 13-304.
   * MODIFICATION OF THE PERIPHERAL PARKING LOT LANDSCAPING TO THAT AS SHOWN ON THE PLAN AT THE MODIFIED TRANSITIONAL SCREEN ALONG THE WESTERN PROPERTY LINE ONLY.

6. ACCORDING TO THE FAIRFAX COUNTY – COUNTY WIDE TRAILS PLAN DATED 2003, AN 8' ASPHALT TRAIL IS REQUIRED ALONG THE PROPERTY'S FRONTAGE WITH BLUE SPRING DRIVE. AN EXISTING 6' ASPHALT TRAIL ALONG BLUE SPRING DRIVE (ON PARCEL 6 ONLY) IS IDENTIFIED ON THE PLAN. BECAUSE THIS EXISTING TRAIL IS IN THE RPA/EQC/FLOODPLAIN, NO IMPROVEMENTS TO THE EXISTING TRAIL ARE PROPOSED. THE APPROXIMATE LOCATION OF AN 8' ASPHALT TRAIL EXTEINSION FROM THE EXISTING TRAIL TO THE FAIRFAX/LOUDOUN COUNTY LINE IS SHOWN ON THE PLAN. HOWEVER, THIS PROPOSED TRAIL EXTENSTION IS ALSO IN THE RPA/EQC/FLOODPLAIN. FINAL LOCATION AND METHODS OF CONSTRUCTION FOR THE NEW TRAIL MUST BE COORDINATED WITH AND APPROVED BY THE DEPARTMENT OF PUBLIC WORKS AND ENVIRONMENTAL SERVICES (DPW&ES) TO MINIMIZE DISTURBANCE WITHIN THESE IDENTIFIED AREAS. AN 8' ASPHALT TRAIL IS ALSO REQUIRED ALONG PLEASANT VALLEY ROAD. HOWEVER, THIS TRAIL IS ON THE EAST SIDE OF THE ROAD AND DOES NOT AFFECT THE APPLICATION AREA.

7. THE COUNTY OF FAIRFAX IS THE PUBLIC WATER AND SANITARY SEWER SUPPLY AGENCY FOR THIS DEVELOPMENT.

8. AN EXISTING STORMWATER MANAGEMENT (SWM) FACILITY (DRY POND) IS SHOWN ON THE PLAN. THIS POND WILL BE MODIFIED USING CURRENT DPW&ES STANDARDS. THIS POND WAS ORIGINALLY DESIGNED TO SERVE A LARGE DRAINAGE AREA. THE DRAINAGE AREA HAS SINCE DECREASED AND IT IS ANTICIPATED THAT A SMALLER POND WILL BE REQUIRED. IF THE SMALLER POND IS NOT ADEQUATE TO SERVE THE NEW DRAINAGE AREA AND THE PROPOSED IMPROVEMENTS AS SHOWN, AN ADDITIONAL UNDERGROUND SWM FACILITY WILL BE ADDED. A POTENTIAL LOCATION FOR AN UNDERGROUND SWM FACILITY HAS BEEN SHOWN ON THE PLAN.

9. THIS PLAN SHOWS THE APPROXIMATE LOCATION OF ALL KNOWN EXISTING UTILITY EASEMENTS HAVING A WIDTH OF 25' OR MORE AND ALL MAJOR UNDERGROUND UTILITY EASEMENTS REGARDLESS OF WIDTH. THE LOCATION OF THE EASEMENTS SHOWN ARE FROM TAX MAPS AND/OR DEEDS OF RECORD AND SHOULD NOT BE REGARDED AS CORRECT AND FINAL. SEE ALSO GENERAL NOTE 11 BELOW.

10. THERE ARE NO KNOWN HAZARDOUS OR TOXIC SUBSTANCES ON THIS SITE. IF ANY SUBSTANCES ARE FOUND, THE METHODS FOR DISPOSAL SHALL ADHERE TO COUNTY, STATE OR FEDERAL LAW.

11. THIS PLAN DOES NOT SHOW PROPOSED UTILITIY CONNECTIONS TO THE PROPOSED EXPANSIONI. ALL NECESSARY PUBLIC UTILITIES ARE READILY ACCESSIBLE TO THE SITE AND WILL BE EXTENDED BY THE DEVELOPER AND/OR UTILITY COMPANY. SEE ALSO GENERAL NOTE 9 ABOVE.

12. THERE ARE NO CEMETERIES OR PLACES OF BURIAL ON SITE

13. THE PROPOSED LIMITS OF CLEARING AND GRADING ARE SHOWN ON THE PLAN. THESE LIMITS ARE APROXIMATE AND ARE SUBJECT TO ADJUSTMENT AT THE TIME OF FINAL GRADING, ENGINEERING AND LOCATION OF PROPOSED UTILTIIES. ADDITIONAL GRADING IN AREAS IDENTIFIED AS UNDISTURBED ON SHEET 1 MAY OCCUR FOR UTILITY CONNECTIONS AND UTILITY RELOCATIONS. WHERE THE LIMITS OF CLEARING AND GRADING ARE SHOWN ADJACENT TO A PROPERTY LINE, IT SHOULD BE ASSUMED THAT THE LIMITS EXTEND TO THE PROPERTY LINE.

14. IT IS NOT ANTICAPTED THAT ANY OFF-SITE GRADING, R.O.W., PARKING ACCESS AND UTILITY CROSSINGS WILL BE REQUIRED, HOWEVER, IF ANY ARE REQUIRED THEY SHALL BE ALLOWED WITH PERMISSION OF THE ADJACENT OWNER.

15. PRIVATE STREETS, DRIVE AISLES AND/OR PARKING SPACES SHALL CONFORM TO THE STANDARIDS SET BY THE FAIRFAX COUNTY PUBLIC FACILITIES MANUAL.

16. PARKING WILL BE PROVIDED IN ACCORDANCE WITH THE PROVISIONS OF ARTICLE 11 OF THE FAIRFAX COUNTY ZONING ORDINANCE. THE NUMBER OF PARKING SPACES PROVIDED MAY BE ADJUSTED BASED ON THE ACTUAL AMOUNT OF GROSS FLOOR AREA PROVIDED. THE NUMBER OF PARKING SPACES WILL ONLY BE REDUCED IF A LESSER AMOUNT OF GROSS FLOOR AREA IS CONSTRUCTED. THE REDUCTION IN PARKING SPACES WILL BE IN ACCORDANCE WITH THE PROVISIONS OF ARTICLE 11. THE APPLICANT RESERVES THE RIGHT TO PROVIDE MORE THAN THE MINIMUM REQUIRED PARKIING.

17. IN ACCORDANCE WITH PARAGRAPH 4 OF SECTION 16-403 OF THE ZONING ORDINANCE, MINOR MODIFICATIONS TO THE SIZE, DIMENSIONS, FOOTPRINTS AND LOCATIONS OF BUILDINGS, PARKING SPACES, LOADING SPACES, SIDEWALKS, AND UTILITIES MAY OCCUR WITH FINAL ENGINEERING AND DESIGN. THE FOOTPRINTS REPRESENTED HEREON ARE APPROXIMATE. BUILDING FOOTPRINTS MAY BE INCREASED OR DECREASED SO LONG AS THE PERIPHERAL LOT LINE DIMENSIONS ARE NOT DIMINISHED. THE APPLICANT RESERVES THE RIGHT TO DEVELOP A LESSER AMOUNT OF GROSS FLOOR AREA THAN THAT NUMBER REPRESENTED HEREON AND REDUCE THE NUMBER OF PARKING SPACES ACCORDINGLY (SEE GENERAL NOTE 16 ABOVE).

18. THE DISTANCE FROM THE BUILDING(S) TO AN INDIVIDUAL PROPERTY LINE HAS BEEN SHOWN ON THE PLAN. ALL DIMENSIONS EXCEED THE MINIMUM DISTANCE REQUIRED BY THE ANGLE OF BULK PLANE UNLESS NOTED OTHERWISE ON THE PLAN (SEE BULK PLANE DETAIL THIS SHEET).

19. ADEQUATE CLEAR SIGHT DISTANCE WILL BE PROVIDED INCLUDING NECESSARY RIGHT-OF-WAY GRADE AS AGREED TO BY VDOT. EXISTING TREES THAT ARE LOCATED IN THE SIGHT DISTANCE EASEMENT ARE SUBJECT TO APPROVAL OF THE VIRGINIA DEPARTMENT OF TRANSPORTATION AND MAY BE REMOVED BASED ON FINAL SITE PLAN APPROVAL.

20. ADDITIONAL SITE FEATURES SUCH AS ENTRANCE SIGNS, LIGHTS AND/OR WALLS REPRESENTED HEREON ARE FOR ILLUSTRATIVE PURPOSES TO SHOW QUALITY ONLY. HOWEVER, THE FINAL FEATURES PROVIDED WILL BE IN SUBSTANTIAL CONFORMANCE WITH THOSE SHOWN HEREON OR WITH A COMPARABLE EQUIVALENT.

21. PROPOSED LANDSCAPING SHALL MEET OR EXCEED (UNLESS WAIVED OR MODIFIED) MINIMUM COUNTY REQUIREMENTS INCLUDING INTERIOR AND PERIPHERAL PARKING LOT LANDSCAPING.

22. OWNER RESERVES THE RIGHT TO RE-STRIPE ADDITIONAL PARKING SPACES PROVIDED THAT THEY REMAIN WITHIN THE LIMITS OF THE PARKING AREAS SHOWN ON THIS PLAN.

OWNER'S/APPLICANT'S INFORMATION:

PARCEL 6 OWNER AND CO-APPLICANT:
CONTINENTAL-PACKAGING ASSOCIATES L.P.
8341B GREENSBORO DRIVE
McLEAN, VA 22102

PARCEL 9 OWNER AND CO-APPLICANT:
CAFFERTY-LAFAYETTE LC
8341B GREENSBORO DRIVE
McLEAN, VA 22102

18-202 GENERALIZED DEVELOPMENT PLAN COMMENTS:

1. APPLICATION TO BE SUBMITTED WITH THIS GDP.
2. A. PROPERTY LINE INFORMATION AS SHOWN ON PLAN.
   B. REFER TO THE SITE TABULATIONS ON SHEET 1 FOR OVERALL SITE AREA.
   C. SCALE AND NORTH ARROW AS SHOWN ON PLAN.
   D. ANY AND/OR ALL KNOWN EXISTING STRUCTURIES AS SHOWN ON THE PLAN.
   E. EXISTING STREET INFORMATION AS SHOWN ON PLAN,
   F. SEAL AND SIGNATURE AS SHOWN ON THE PLAN.
3. LEGAL DESCRIPTION OF THE PROPERTY TO BE SUBMITTED WITH THIS GDP.
4. FAIRFAX COUNTY ZONING MAP (1"=500') WITH SITE OUTLINED IN RED TO BE SUBMITTED WITH THIS GDP. ACCORDING TO THE FAIRFAX COUNTY COMPREHENSIVE PLAN, PLEASANT VALLEY ROAD ROAD IS PLANNED AS A 4 LANE ARTERIAL. SEE COMMENT #10-R BELOW.
5. N/A
6. AFFIDAVIT TO BE SUBMITTED WITH THIS GDP.
7. WRITTEN STATEMENT SIGNED BY THE PROPERTY OWNERS INDICATING ENDORSEMENT OF THE APPLICATION TO BE SUBMITTED WITH THIS GDP.
8. N/A
9. STATEMENT OF JUSTIFICATION TO BE SUBMITTED WITH THIS GDP.
10. FOR REZONING APPLICATIONS TO AN R, C OR I DISTRICT THIS GDP SHALL SHOW THE FOLLOWING INFORMATION:
   A. SCALE AND NORTH ARROW AS SHOWN ON PLAN.
   B. REFER TO THE SITE TABULATIONS AND/OR PLAN FOR PROPOSED STRUCTURE INFORMATION. ANGLE OF BULK PLANE IS AS SHOWN BELOW.
   C. PROPOSED CIRCULATION AS SHOWN ON PLAN. SEE GENERAL NOTE #6 FOR TRAILS INFORMATION.
   D. MAJOR OPEN SPACE AS SHOWN ON PLAN. SEE SITE TABULATIONS FOR OPEN SPACE PROVIDED.
   E. SEE GENERAL NOTE #8 FOR STORMWATER MANAGEMENT INFORMATION.
   F. EXISTING UTILITY EASEMENTS SHOWN ON PLAN OR REFER TO GENERAL NOTE #9.
   G. REFER TO SITE TABULATIONS ON SHEET 1 FOR PARKING CALCULATIONS.
   H. TOPOGRAPHY AS SHOWN ON PLAN. SEE GENERAL NOTE #3.
   I. AREAS THAT HAVE SCENIC ASSETS OR NATURAL FEATURES DESERVING OF PROTECTION ON THE PROPERTY SHALL BE CONSIDERED FOR PRESERVATION.
   J. ALL REQUIRED LANDSCAPE SCREENING IS SHOWN ON THE PLAN (UNLESS A MODIFICATION AND/OR WAIVER REQUESTED IN GENERAL NOTE #5. PERIPHERAL DIMENSIONS ARE AS SHOWN ON PLAN.
   K. THE EXISTING STRUCTURE IS AS SHOWN ON THE PLAN AND WILL REMAIN WITH THE PROPOSED BUILDING EXPANSION AS SHOWN. THE ORIGINAL BUILDING WAS BUILT IN 1988/89.
   L. REFER TO THE SITE TABULATIONS ON SHEET 1 FOR INFORMATION REGARDING MAXIMUM ALLOWED AND PROPOSED FLOOR AREA RATIO.
   M. REFER TO THE SITE TABULATIONS ON SHEET 1 FOR OPEN SPACE INFORMATION.
   N. THERE ARE NO SPECIAL AMENITIES THAT ARE PROPOSED WITH THIS GDP.
   O. ANY AND ALL PUBLIC IMPROVEMENTS ARE AS SHOWN ON THE PLAN. DEVELOPMENT SCHEDULE TO BE DETERMINED AS MARKET CONDITIONS ALLOW.
   P. DEVELOPMENT SCHEDULE TO BE DETERMINED BY THE EXISTING BUILDING OCCUPANT'S (OBERTHUR CARD SYSTEMS) FACILITY EXPANSION NEEDS.
   Q. THE 100 YR. FLOODPLAIN EASEMENTS (DB 10026, PG 561 FOR PARCEL 9 AND DB 6939, PG 878 FOR PARCEL 6) ARE SHOWN ON THE PLAN. THE EQC LIMITS HAVE BEEN CALCULATED USING FAIRFAX COUNTY STANDARDS. THESE LIMITS ARE SHOWN ON THE PLAN. APPROVED RPA (COUNTY #5951-RPA-01-1) FOR PARCEL 9 AND THE COUNTY MAPPED RPA FOR PARCEL 6 ARE SHOWN ON THE PLAN.
   R. NO IMPROVEMENTS TO THE PUBLIC R.O.W. OR ADDITIONAL R.O.W. DEDICATIONS ARE PROPOSED WITH THIS GDP. EXISTING ROADS ARE AS SHOWN ON THE PLAN. SEE PLAN FOR DIMENSIONS.
   S. INFORMATION REGARDING PROPOSED VEGETATION AS SHOWN ON THE PLAN. REFER TO THE EXISTING VEGETATION MAP (SEPARATE DOCUMENT TO BE SUBMITTED WITH THIS GDP) FOR INFORMATION REGARDING EXISTING VEGETATION.
   T. THERE ARE NO KNOWN GRAVES OR PLACES OF BURIAL ON SITE.
   U. OWNERS/APPLICANTS AS NOTED ON THIS SHEET.
11. THIS DEVELOPMENT IS IN CONFORMANCE WITH THE FAIRFAX COUNTY COMPREHENSIVE PLAN.
12. THERE ARE NO KNOWN HAZARDOUS OR TOXIC SUBSTANCES ON SITE.
13. THIS DEVELOPMENT SHALL CONFORM TO PROVISIONS OF ALL APPLICABLE ORDINANCES, REGULATIONS AND ADOPTED STANDARDS WITH THE REQUESTED WAIVERS AND/OR MODIFICATIONS AS STATED IN GENERAL NOTE #6.
14. ANY ADDITIONAL INFORMATION THAT THE APPLICANT MAY DESIRE TO PROFFER IN THE CONSIDERATION OF THE APPLICATION WILL BE SUBMITTED WITH THIS PLAN.
15. THE APPLICATION AREA IS WITHIN A WATER SUPPLY PROTECTION OVERLAY DISTRICT.
16. N/A
17. APPLICATION FEE TO BE SUBMITTED WITH THIS PLAN.

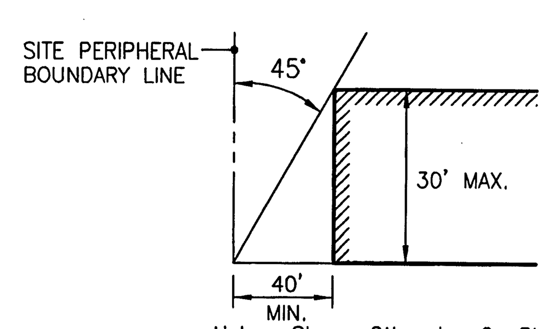

Unless Shown Otherwise On Plan
FRONT YARD

NO REQUIREMENT.
REAR YARD

NO REQUIREMENT.
SIDE YARD

ANGLE OF BULK PLANE

NOT TO SCALE

Application RZ No. 2003-SU-057 Staff SHIELDS
APPROVED DEVELOPMENT PLAN
(DP) (GDP) (CDP) (FDP)
SEE PROFFERS DATED 3·23·04
Date of (BOS) (PC) approval 5·24·04
Sheet 2 of 2

BC Consultants
Planners • Engineers • Surveyors • Landscape Architects
12600 Fair Lakes Circle, Suite 100, Fairfax, VA 22033
(703)449-8100 (703)449-8108 (Fax)
www.bccon.com

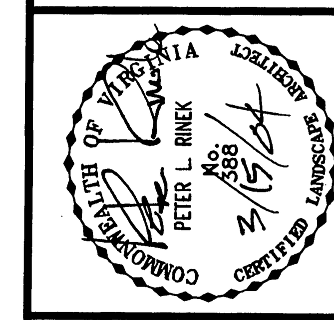

GENERAL NOTES AND COMMENTS

LAFAYETTE BUSINESS CENTER

SULLY DISTRICT
FAIRFAX COUNTY, VIRGINIA

BC REVISIONS	
REVISED 10-9-03	
REVISED 02-25-04	
REVISED 03-15-04	
OWNER	SEE SHEET 2 FOR OWNER'S INFORMATION
DESIGNED BY:	DDD
DRAFTED BY:	CAD
CHECKED BY:	PLR
DATE:	JULY, 2003
SCALE:	HOR. NA VERT. NA
SHEET 2 OF 2	
CO. NO.	
CAD NAME:	G3012NOTE.DWG
LAYOUT:	NOTE
FILE NO.	03012.01.06.0

XREFS: