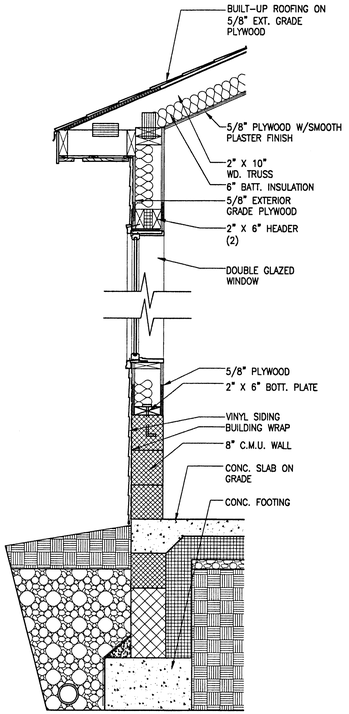

AA-TYPICAL WALL SECTION

scale: 1:.75

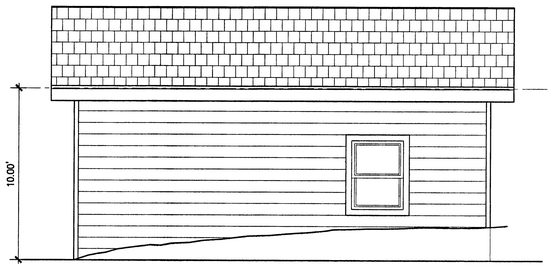

1-SOUTH ELEVATION

scale: 1:40

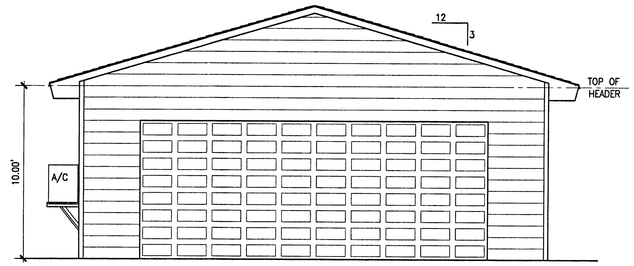

2-WEST ELEVATION

scale: 1:40

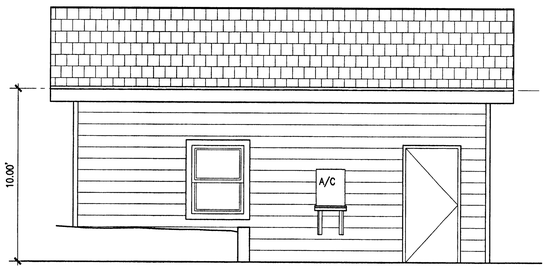

2-NORTH ELEVATION

scale: 1:40

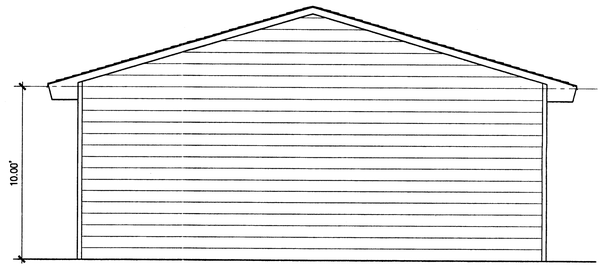

4-EAST ELEVATION

scale: 1:40

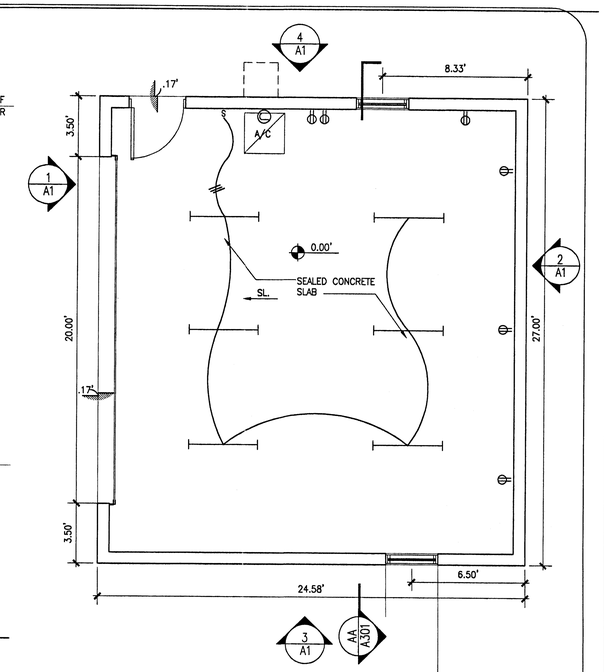

GARAGE FLOOR PLAN

scale: 1:40

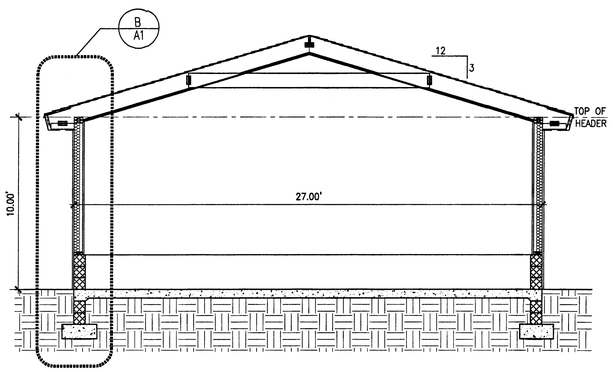

A-BUILDING SECTION

scale: 1:40

ZONING INFORMATION

1. ZONING: R-4 HC
2. LOT AREA: 8,932 S.F.
3. LOT COVERAGE:

HOUSE	1,316.00 SF
PORCH	135.00 SF
STAIRS	57.00 SF
GARAGE	667.00 SF

4. SETBACKS REQUIRED

FRONT	30'
REAR	25'
SIDES	10'

SHED (120SF TO BE DEMOLISHED)

TOTAL LOT COVERAGE: 2,175.00 SF

LEGAL DESCRIPTION

LOT: 56
BLOCK:3
SECTION: 4
METES AND BOUNDS: –
SUBDIVISION: CITY PARK HOMES OF VIRGINIA
COUNTY: FAIRFAX
SUPERVISOR DISTRICT: PROVIDENCE

*NOTE: PROPERTY SERVED BY PUBLIC WATER/SEWER

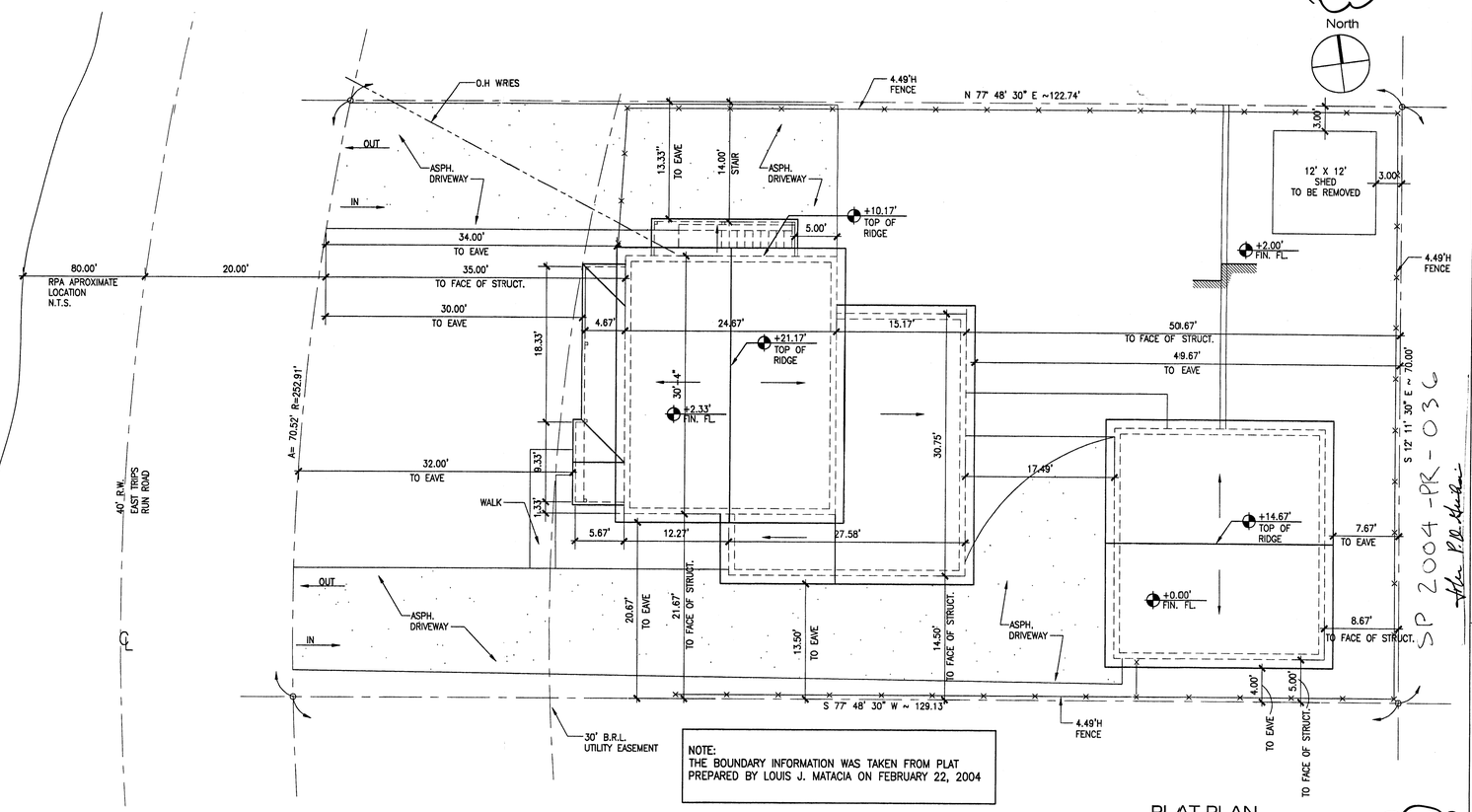

NOTE:
THE BOUNDARY INFORMATION WAS TAKEN FROM PLAT PREPARED BY LOUIS J. MATACIA ON FEBRUARY 22, 2004

* NO UTILITY EASEMENT

PLAT PLAN

scale: 1:80

SP 2004-PR-036

Chairman, BZA

Mr. and Mrs. Hinojosa Residence
2927 E. Tripps Run Road
Falls Church, Virginia 22042

Mr.

RECEIVED
Department of Planning & Zoning
MAY 10 2004
Zoning Evaluation Division

Jorge L. Bernal
Architect
12437 St. James Rd.
Rockville, MD. 20850

No.	Date	Item
3	6/11/04	Per scale. cc.
2	05.04.04	COUNTY COMMENTS

Issued Drawing Log

Scale: Shown

J3 Drawn
J3 Checked
JB Approved

COMMONWEALTH OF VIRGINIA
JORGE L. BERNAL
No. 0401011204
ARCHITECT
5/07/04

A1

Contract No.	HIR-04
Issue Date	03/24/04
Last Revision	

RECEIVED
Department of Planning & Zoning
JUN 11 2004
Zoning Evaluation Division