# REVISED PROPOSED DEVELOPMENT CONDITIONS

## FDPA 78-C-118-10, American Personal Communications

January 30, 1997

If it is the intent of the Planning Commission to approve FDPA 78-C-118-10, the staff recommends the such approval be subject to the following conditions:

1. Development of the application property shall be in conformance, as defined by Section 16-403 of the Zoning Ordinance, with the Final Development Plan FDPA 78-C-118-10, as prepared by Dove and Associates, dated November 13, 1995, as revised through January 23, 1997, and these conditions. With the exception of Development Condition 2 below, this FDPA shall be applicable to the proposed telecommunications facility (monopole) and shall not be deemed to add new restrictions or limitations on the existing church and related facilities.

2. In order to ensure that the visual impacts of the proposed treepole are minimized, there shall be no disturbance to the existing tree cover on the site except for the 2500 square foot leased area shown on the FDPA.

3. The treepole shall be designed and constructed in accordance with the specifications contained in Attachment A of these conditions.

4. The evergreen trees proposed around the periphery of the leased area shall meet the Public Facilities Manual requirements.

5. Prior to site plan approval, documentation shall be provided to the Department of Environmental Management (DEM) from the Fairfax County Water Authority and from AT&T demonstrating that there are no objections or issues with respect to access the leased area and monopole over these utility easements; if this consent is not obtained this FDPA shall be null and void.

6. The telecommunications facility shall be limited as follows:

   1) The treepole shall not exceed 120 feet in height;
   2) up to a maximum of 12 panel antennas measuring 66"x9"x3" shall be permitted. These antennas shall be located on the treepole such that the antennas are hidden and/or blend in with artificial branches of the treepole and with the surrounding tree cover;
   3) up to a maximum of five (5) equipment cabinets measuring 36" x 60" x 36" shall be permitted; however, no shelters or other structures are permitted in conjunction with the equipment cabinets;

4) the treepole and equipment cabinets shall be erected on a 20' x 15' concrete pad within the leased area as shown on the FDPA.
5) no additional telecommunications equipment such as whip or dish antennas may be placed on the treepole without an amendment to this FDPA application.

7. This facility shall be operated as an unmanned facility 24 hours per day with the exception of periodic monthly maintenance inspections. Access to the site shall be restricted to routine maintenance visits and emergency situations. Care should be exercised by the applicant to ensure that the privacy of adjacent residential units is preserved and that access to the facility does not become a nuisance to adjacent residential development.

8. Temporary construction access from the Fairfax County Parkway may be permitted subject to the approval of VDOT and provided that such temporary construction access does not require any additional clearing, grading or tree disturbance.

ATTACHMENT

DRAWN BY: MAL DATE: 06/30/94

CHK'D BY: MAL DATE: 06/30/94

VALMONT.

CUSTOMER:

PAGE: ONE OF TWO

PROJECT: TREE POLE DETAILS - STEEL POLE AND "TREE" STRUCTURE

NOTES:

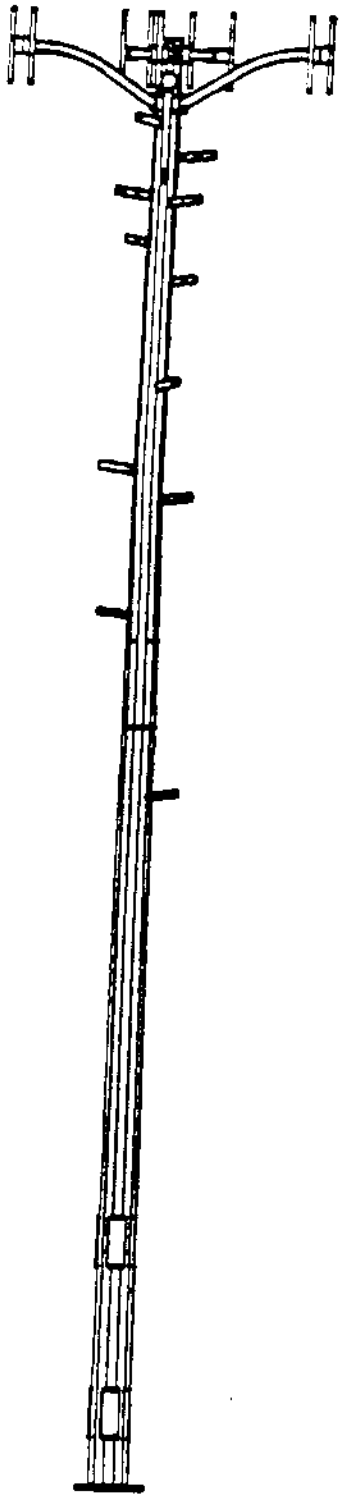

COMMUNICATION STRUCTURE

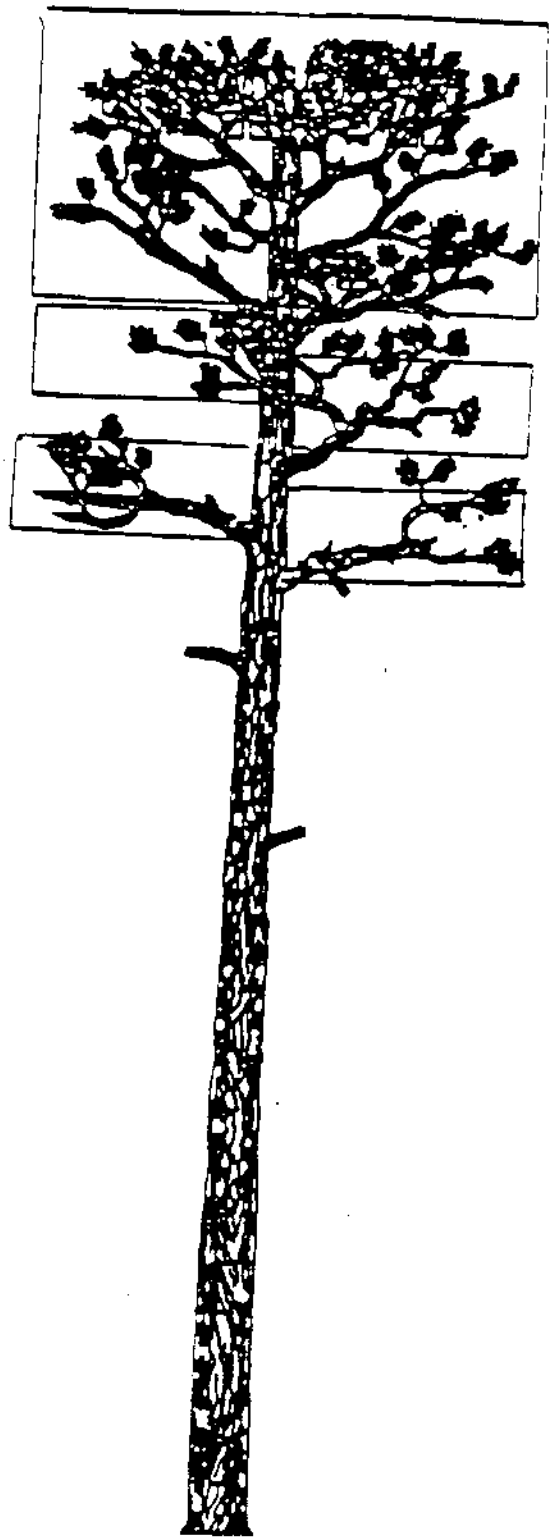

ARTIFICIAL TREE

DRAWN BY: MAL DATE: 06/30/94

CHK'D BY: MAL DATE: 06/30/94

VALMONT.

CUSTOMER:

PAGE: TWO OF TW

PROJECT: TREE POLE DETAILS - BRANCHES, LIMBS AND ARMS

NOTES:

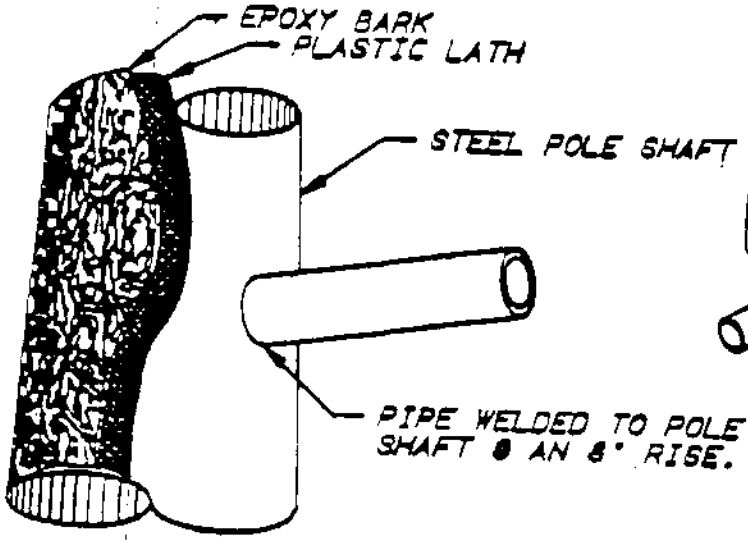


TRUNK/LIMB DETAIL

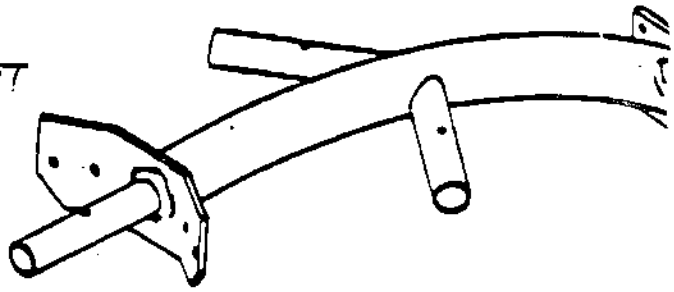

ANTENNA ARM HAS THREE BRANCH CONNECTING PIPES.

ANTENNA MOUNTING ARM DETAI

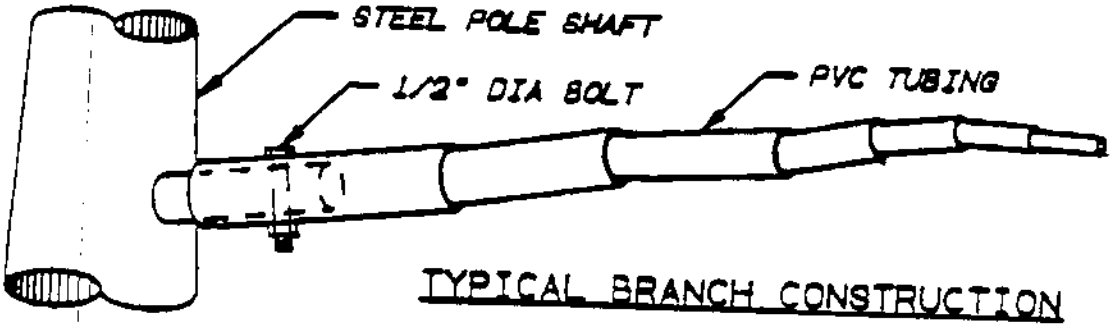


TYPICAL BRANCH CONSTRUCTION

NOTE:
LENGTH AND DIAMETER OF SECTIONS OF PVC WILL VARY FOR EACH LIMB. MATERIAL IS PVC TUBE WITH EPOXY BARK SHOWN ABOVE.

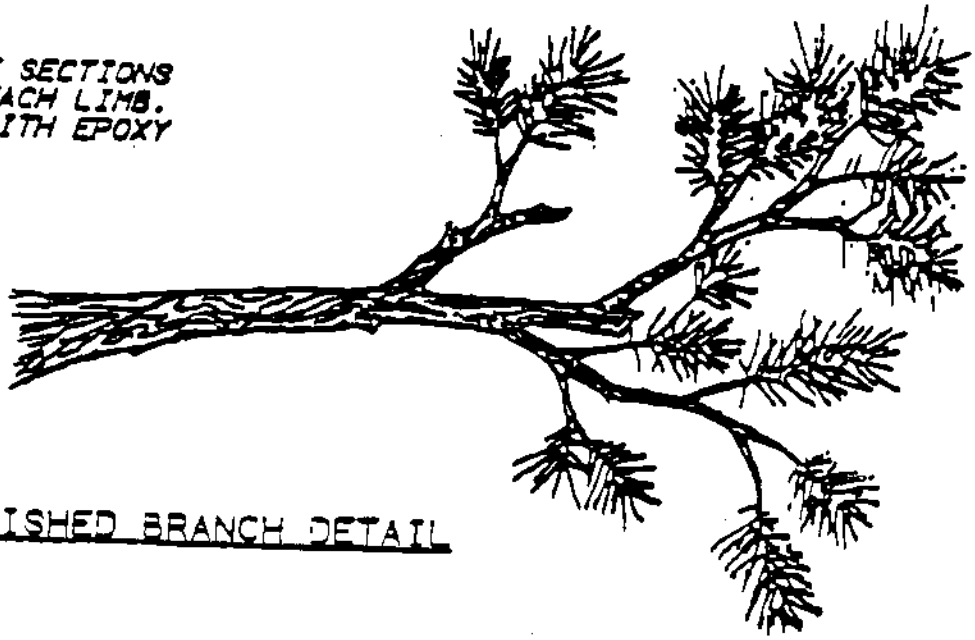

FINISHED BRANCH DETAIL