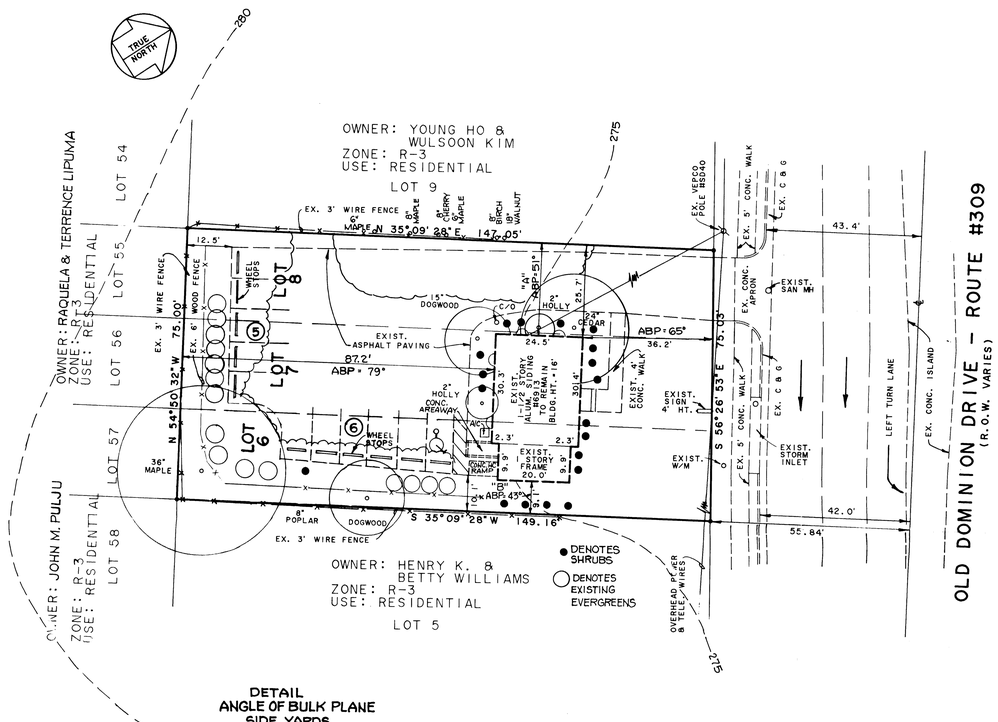

OLD DOMINION DRIVE – ROUTE #309
(R.O.W. VARIES)

OWNER: MRO MIDATLANTIC CORP.
ZONE: C-5
USE: FAST FOOD RESTAURANT

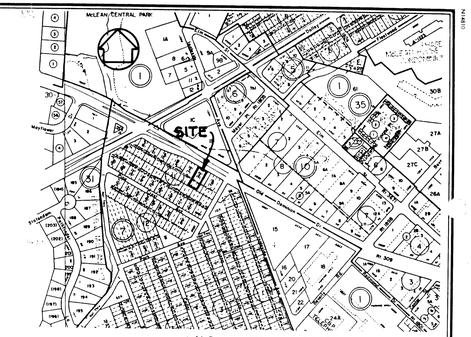

VICINITY MAP
SCALE: 1" = 500'

DETAIL
ANGLE OF BULK PLANE
SIDE YARDS

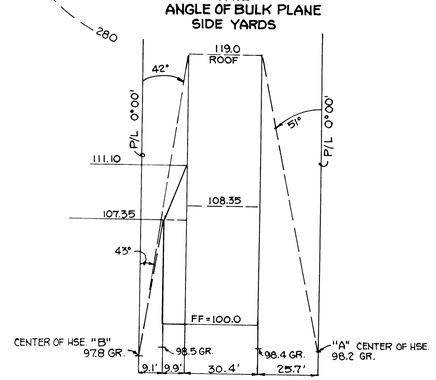

General Notes:

- Owner: Thomas A. And Anne. C. DiBenedetto
  6410 Furlong Road
  McLean, VA 22101
  DB: 9200 PG:418
- Property Address: 6913 Old Dominion Dr.
  McLean, VA 22110
- Tax Map: 30-2-((7))-(11)-6,7, and 8
- Zone: R-3
- Proposed Use: Office
- Site Area: 11,108 SQ FT
- Minimum Lot Area Required: 10,500 SQ FT
- Minimum Lot Width: 80 feet
- Existing Lot Width: 75 feet
- Bulk Regulations:
  Maximum Building Height: 60 feet
  Existing Building Height: 16 feet
  Minimum Yard Requirements:
  Front Yard: Controlled by a 40 degree angle of bulk plane, but not less than 30 feet
  Old Dominion Drive Front Yard: 36.2 feet and ABP = 65 degrees.
  Side Yard : Controlled by a 35 degree angle of bulk plane, but not less than 10 feet
  East Side: 9.1 feet and angle bulk plane 43 degree
  West Side: 25.7 feet and angle bulk plane 51 degree
  Rear Yard: Controlled by a 35 degree angle of bulk plane, but not less than 25 feet
  Existing Rear Yard: 88 feet and angle bulk plane 79 degree
- Building Area: 2,085 SQ FT gross
- F.A.R. 2,085 SQ FT / 11,108 SQ FT = 0.19
- Open Space Provided: 40%
- Parking Analysis:
  Required: 3.6 Space / 1000 SQ FT Gross area = 8 Spaces
  Provided: 10 regular Spaces
  1 handicapped Space
  Total 11 spaces
- Building was constructed 1941
- Boundary and Topographic from records.
- Existing uses served by Public Water and Sewer.
- East, West (sides) and South (rear) boundaries of the site require transitional screening yard 1 "An unbroken strip of open space a minimum of 25 feet wide and planted...With the addition of a barrier D,E, or F.
- Modification is requested based on preservation of existing vegetation.
- This proposal is not requesting any clearing, grading or additions.
- Storm water management is not required due to no additional impervious area to be added to site.
- No known grave, object or structure marking a place of burial is known to be on this site.
- The County trails plan requires a trail on the frontage of Old Dominion Drive. Modification of requirements to allow existing 5 foot concrete walk to meet trail requirement is requested.
- This site is not within designate flood plain.

...ation No. SE 01-D-050 Staff PB
APPROVED SE SP PLAN
SEE DEV CONDS DATED
Date of BOS (BZA) approval 4/8/02
Sheet 1 of 1

SPECIAL EXCEPTION PLAT
LOTS 6, 7, & 8
BLOCK 11
WEST MCLEAN
DRANESVILLE DISTRICT
FAIRFAX COUNTY, VIRGINIA

SCALE: 1" = 20' DATE: 05-22-1991
08-01-1997
6-19-2001

COMMONWEALTH OF VIRGINIA
REID M. DUDLEY
Cert. No. 09548
6/21/01
PROFESSIONAL ENGINEER

RECEIVED
OCT 17 2001
DEPARTMENT OF PLANNING AND ZONING
ZONING EVALUATION DIVISION

RUNYON, DUDLEY, ASSOCIATES, INC.
ENGINEERING – SURVEYING – PLANNING
10650 MAIN STREET – SUITE #301 FAIRFAX, VA 22030
PHONE: (703) 591-4606 – FAX: (703) 591-3982.

SHEET 1 OF 1
F-1189 RP

SE 01-D-050