CONCEPTUAL/FINAL DEVELOPMENT PLAN

CDP/FDP RZ-96-H-043

Jefferson at President's Park

PREPARED FOR

Jefferson at President's Park, L.P.

PREPARED BY:

LAND DESIGN, INC.
1414 PRINCE ST., SUITE 400
ALEXANDRIA, VIRGINIA 22314-2814
PHONE: 703-549-7784
FAX: 703-549-4984

January 9, 1998
Revised February 10, 1998
Revised April 22, 1998

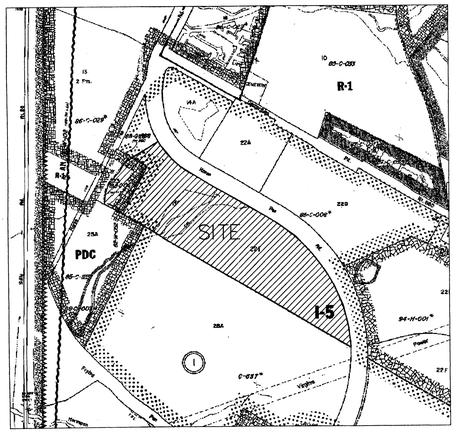

VICINITY MAP

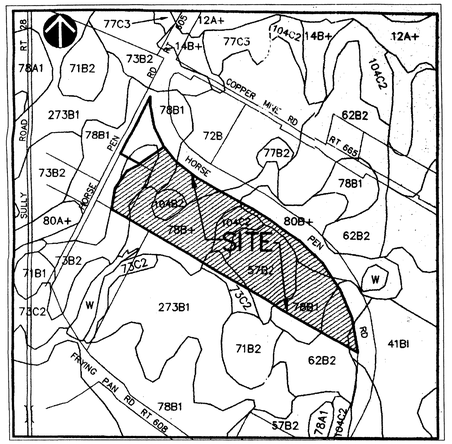

SOILS MAP

Application No. RZ 1996-H-043 Staff DAN JAMES
APPROVED DEVELOPMENT PLAN
(DP) (GDP) (CDP) (FDP)
SEE PROFFERS DATED 4-22-98
Date of (BOS) (PC) approval 5-11-98
Sheet 1 of 10

RECEIVED
OFFICE OF COMPREHENSIVE PLANNING
APR 27 1998
ZONING EVALUATION DIVISION

INDEX:

1. COVER SHEET
2. CONCEPTUAL/FINAL DEVELOPMENT PLAN
3. NOTES/TABULATIONS/BULK PLANE
4. LANDSCAPE/AMENITIES PLAN
5. LANDSCAPE/AMENITIES PLAN
6. COURTYARD ENLARGEMENT/ TYPICAL BUILDING LANDSCAPE
7. CLUBHOUSE ENLARGEMENT/OPTION B/ TYPICAL PLANTING BUFFER
8. SITE DETAILS
9. TYPICAL BUILDING ELEVATIONS
10. HORSE PEN ROAD STREETSCAPE PLAN

RECEIVED
OFFICE OF COMPREHENSIVE PLANNING
APR 27 1998
ZONING EVALUATION DIVISION

COMMONWEALTH OF VIRGINIA
PETER R. CROWLEY
LICENSE NO.
00184
LANDSCAPE ARCHITECT
4-22-98

Land Design Inc.
Landscape Architecture Land Planning
Urban Design
1414 Prince Street Suite 400
Alexandria, VA 22314-3020
703/549-7784
Fax: 703/549-4984
LDI # 27131

SHEET # 1 OF 10

:\27131\cad\1311dpcvr.dwg Wed Apr 22 20:40:28 1998

NOTES:

1. LIMITS OF CLEARING AND GRADING ARE THE ENTIRE SITE.
2. SEE SHEET 3 OF 10 FOR NOTES AND TABULATIONS

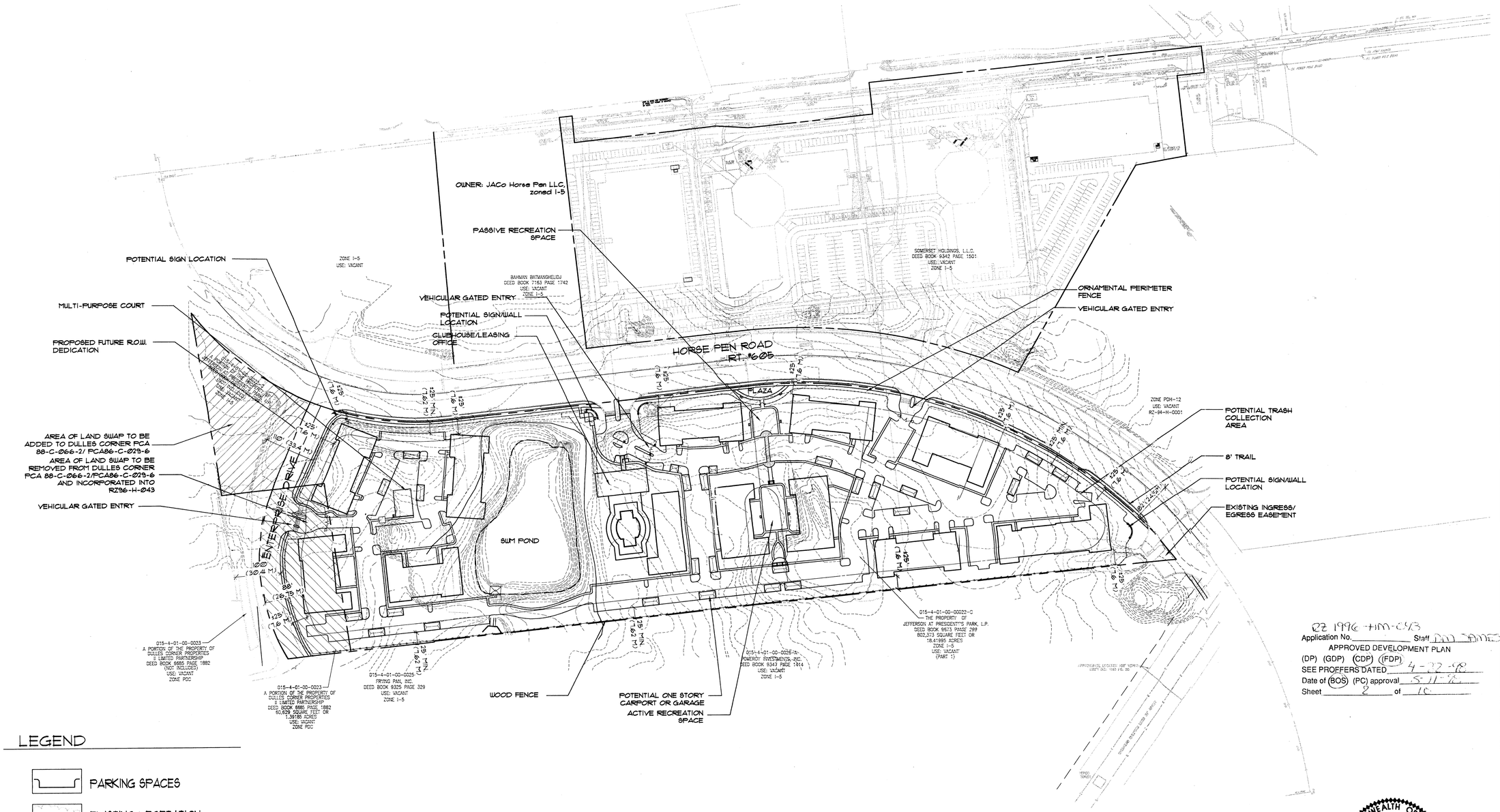

LEGEND

- PARKING SPACES
- EXISTING VEGETATION
- PROPOSED WALK
- PROPOSED 8' TRAIL

RZ 1996-HM-043
Application No. _____ Staff DM JAMES
APPROVED DEVELOPMENT PLAN
(DP) (GDP) (CDP) (FDP)
SEE PROFFERS DATED 4-22-98
Date of (BOS) (PC) approval 5-11-98
Sheet 2 of 10

COMMONWEALTH OF VIRGINIA
PETER R. CROWLEY
LICENSE NO. 00184
4-22-98
LANDSCAPE ARCHITECT

SCALE: 1"=100'

0 50 100 200

NORTH

Land Design Inc.
Landscape Architecture Land Planning
Urban Design Geographic Information Systems
1414 Prince Street Suite 400 703/549-7784
Alexandria, VA 22314-2815 Fax: 703/549-4984

The Jefferson at President's Park
Hunter Mill District
Fairfax County, Va.

Conceptual/ Final Development Plan RZ-96-H-043

REVISIONS
2/10/98
4/22/98

DATE: 1/9/98
DES. JRM DWN. JRM
SCALE: 1"=100'
PROJECT/FILE NO. 27131
SHEET NO. SHEET 2 OF 10

k:\27131\cad\131FDPs2 fdpcdp.dwg Tue Apr 21 18:09:11 1998

SIT. ,BULATION

EXISTING ZONING	I-5 AND PDC
PROPOSED ZONING	PDH-30 W/AFFORDABLE DWELLING UNITS
TOTAL SITE AREA	863,000 SQ. FT. OR 19.81180 ACRES
USE	MULTI-FAMILY HOUSING
PROPOSED DENSITY	442/19.81180 = 22.31 DU/AC
PROPOSED NUMBER OF UNITS	442 INCLUDING ADUs
ADU's REQUIRED	5 ADU's
MINIMUM LOT AREA REQUIRED	N/A
LOT AREA PROVIDED	18.41995 ACRES (I-5)
	1.39185 ACRES (PDC)
	19.8110 ACRES
AREA OF DEDICATION	.70 ACRES FOR ENTERPRISE DRIVE
MAXIMUM BUILDING HEIGHT ALLOWED	150 FT.
BUILDING HEIGHT PROVIDED	65 FT. (4 FLOORS ABOVE GRADE)
YARD REQUIREMENTS REQUIRED	PERIMETER SETBACKS AS SHOWN ON CDP/FDP (SEE BULK PLANE)
YARDS PROVIDED	PERIMETER SETBACKS AS SHOWN ON CDP/FDP (SEE BULK PLANE)
OPEN SPACE REQUIRED	40% (WITH ADU DEVELOPMENT)
OPEN SPACE PROVIDED	44% OR 8.71 ACRES
ACTIVE RECREATION SPACE PROVIDED	0.4 ACRES
TOTAL PARKING REQUIRED	708 (1.6/DU)
TOTAL PARKING PROVIDED	751 (1.7/DU)

ANGLE OF BULK PLANE: MULTI-FAMILY BUILDING

MINIMUM REQUIRED YARD FOR MULTIFAMILY BUILDINGS
WITH 65' HEIGHT AT PERIPHERAL BOUNDARIES OF PDC DISTRICT

YARD		ANGLE	DISTANCE
FRONT	=	20 DEGREES	24' (NOT LESS THAN 15')
SIDE	=	15 DEGREES	17' (NOT LESS THAN 10')
REAR	=	15 DEGREES	17' (NOT LESS THAN 15')

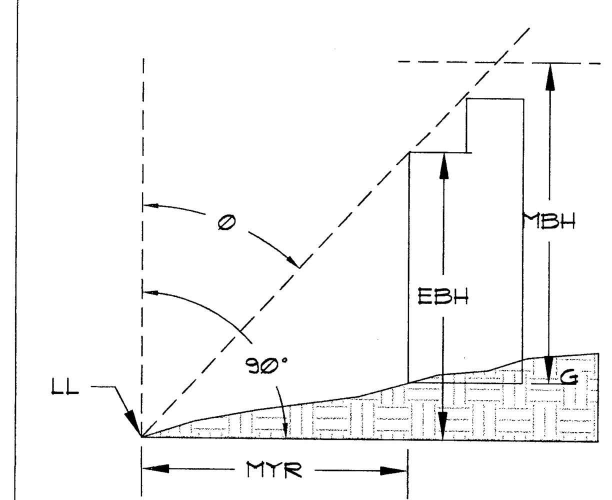

Ø : ANGLE OF BULK PLANE
LL : LOT LINE
MYR : MINIMUM YARD REQUIREMENT
EBH : EFFECTIVE BUILDING HEIGHT
MBH : MAXIMUM BUILDING HEIGHT
G : FINISHED GRADE

$$MYR = EBH \tan Ø$$
$$EBH = \frac{MYR}{\tan Ø}$$

CDP/FDP NOTES:

1. THE PROPERTY THAT IS THE SUBJECT OF THIS CDP/FDP SHOWN HEREON IS LOCATED ON FAIRFAX COUNTY TAX ASSESSMENT MAP NO. 15-4 ((1)) 22 I AND 23 PT AND IS CURRENTLY ZONED I-5 (22 I) AND PDC (23 PT).

2. THE HORIZONTAL DATUM IS VIRGINIA STATE GRID NORTH BASED ON DEED BOOK 9673 AT PAGE 299.

3. THE TOPOGRAPHY SHOWN HEREON WAS FLOWN BY AIR SURVEY CORPORATION ON JULY 20, 1995 AND FIELD VERIFIED BY VIKA, INC. THE CONTOUR INTERVAL IS TWO (2) FEET. LANDDESIGN, INC. ASSUMES NO RESPONSIBILITIES FOR DESIGN OR CONSTRUCTION CHANGES CAUSED BY INACCURACIES IN THE TOPOGRAPHIC INFORMATION.

4. BOUNDARY INFORMATION WAS OBTAINED BY FIELD SURVEY BY VIKA, INC. DATED MAY 17, 1996.

5. THE PROPERTY SHOWN HEREON IS A PORTION OF THE PROPERTY ACQUIRED BY JEFFERSON AT PRESIDENT=S PARK, L.P. FROM SOMERSET HOLDING, L.C. BY DEED DATED APRIL 4, 1996 AND RECORDED IN DEED BOOK 9673 AT PAGE 299 AND ALSO PART OF THE PROPERTY ACQUIRED BY DULLES CORNER PROPERTIES II, L.P. FROM MARGARET S. PEETE BY DEED RECORDED IN DEED BOOK 6685 AT PAGE 882.

6. THE PROPERTY IS LOCATED ON LAND UNIT AA@ OF THE DULLES SUBURBAN CENTER OF THE AREA III COMPREHENSIVE PLAN. LAND UNIT AA@ IS PLANNED FOR A COMPLEMENTARY MIX OF LAND USES INCLUDING OFFICES, HOTEL, SUPPORT RETAIL UP TO A 0.5 TO 1.0 F.A.R. WITH OPTIONAL RESIDENTIAL USE CONSIDERED AS PART OF MIXED USE PROJECTS. THE PROPOSED DEVELOPMENT PLAN IS IN CONFORMANCE WITH THE COMPREHENSIVE PLAN.

7. PUBLIC WATER AND SANITARY SEWER ARE AVAILABLE AND WILL BE EXTENDED TO SERVE THE DEVELOPMENT.

8. STORMWATER MANAGEMENT FACILITIES HAS BEEN PROVIDED PER SITE PLAN 6867-SP-07-02 ACCORDING TO THE APPLICABLE ORDINANCES AND PRACTICES OF FAIRFAX COUNTY UNLESS WAIVED OR MODIFIED BY THE DIRECTOR OF DEM. ADEQUATE STORM DRAINAGE SYSTEM IN ACCORDANCE WITH THE PUBLIC FACILITIES MANUAL STANDARDS AND DESIGN CRITERIA WILL PROVIDED.

9. THE ENTIRE SUBJECT PROPERTY IS LOCATED WITHIN AN RMA ZONE. NO R.P.A. OR ENVIRONMENTAL QUALITY CORRIDOR CURRENTLY EXISTS ON THIS PROPERTY. A MINOR FLOOD PLAIN (92+/- ACRES) EXISTS ON THE PROPERTY ASSOCIATED WITH THE POND CONSTRUCTED WITH 6867-SP-07-02; THE 100 YEAR WATERSHED IS AT ELEV. 303.6 THE FLOOD AREA IS LESS THAN 50% OF THE SITE AREA.

10. TO THE BEST OF OUR KNOWLEDGE, NO GRAVE SITES OR STRUCTURES MARKING A BURIAL SITE ARE PRESENT ON THE SUBJECT PROPERTY.

11. TO THE BEST OUR KNOWLEDGE NO HAZARDOUS OR TOXIC SUBSTANCES ARE KNOWN TO EXIST ON THE SUBJECT PROPERTY.

12. THERE ARE NO EXISTING STRUCTURES ON THE SUBJECT PROPERTY.

13. THERE IS A PROPOSED BICYCLE/TYPE 1 TRAIL (ASPHALT) INDICATED ALONG THE HORSE PEN ROAD FRONTAGE OF THIS PROPERTY AS SHOWN ON THE FAIRFAX COUNTY COMPREHENSIVE TRAIL PLAN.

14. THE ENTIRE SITE WILL BE SUBJECT TO CLEARING AND GRADING. FINAL LIMITS OF CLEARING AND GRADING WILL TAKE INTO CONSIDERATION FINAL SITE ENGINEERING AND SHALL BE SUBMITTED FOR REVIEW AND APPROVAL TO DEM AT TIME OF FINAL SITE REVIEW.

15. TYPICAL ARCHITECTURAL SKETCHES OF TYPICAL PROPOSED STRUCTURES HAVE BEEN PROVIDED.

16. THE MAXIMUM HEIGHT OF ALL RESIDENTIAL BUILDINGS IS 65 FEET. THE ANGLES OF BULK PLANE ARE INDICATED ON THE PLANS.

17. DEVELOPMENT WILL COMMENCE UPON COMPLETION OF REQUIRED FAIRFAX COUNTY PLAN PROCESSING AND APPROVALS.

18. LANDSCAPED OPEN SPACE AREAS SHOWN HEREON MAY BE MODIFIED AT THE TIME OF FINAL ENGINEERING AND DESIGN IN ACCORDANCE WITH SECTION 16-403 OF THE ZONING ORDINANCE. HOWEVER, IF IT IS DETERMINED THAT A LANDSCAPED OPEN SPACE AREA(S) CANNOT BE PROVIDED, THEN A COMPARABLE AREA(S) OF LANDSCAPED OPEN SPACE WILL BE SUBSTITUTED ON THE SITE, OR, IF NECESSARY, ADDITIONAL LANDSCAPING WILL BE PROVIDED WITH THE APPROVAL OF DEM.

19. IN ACCORDANCE WITH PARAGRAPH 4 OF SECTION 16-403 OF THE ZONING ORDINANCE, MINOR MODIFICATIONS TO THE SIZES, DIMENSIONS, FOOTPRINTS AND LOCATIONS OF BUILDINGS, PARKING SPACES, GARAGES, SIDEWALKS AND UTILITIES MAY OCCUR WITH FINAL ENGINEERING AND DESIGN. THE FOOTPRINTS REPRESENTED HEREON ARE APPROXIMATE. BUILDING FOOTPRINTS MAY BE INCREASED OR DECREASED AND THE NUMBER OF UNITS IN EACH BUILDING MAY BE MODIFIED, SO LONG AS THE MINIMUM OPEN SPACE PROVIDED IN THE TABULATION AND THE MINIMUM DIMENSIONS TO THE PERIPHERAL LOT LINES ARE NOT DIMINISHED. THE APPLICANT RESERVES THE RIGHT TO DEVELOP A LESSER NUMBER OF DWELLING UNITS THAN THAT NUMBER REPRESENTED IN THE TABULATION AND REDUCE THE NUMBER OF PARKING SPACES AND ADU=S ACCORDINGLY. FEATURES SUCH AS OPTIONAL ROOMS (TYPICAL LOT LAYOUT), DECKS, PATIOS, CHIMNEYS, STAIRS AND STOOPS MAY BE OPTIONAL FOR EACH DWELLING UNIT AND WILL BE SPECIFIED AT THE TIME OF FINAL ENGINEERING. THE STAIRS AND STOOPS SHOWN ON THE CDP/FDP ARE FOR ILLUSTRATIVE PURPOSES ONLY; THE ACTUAL SIZE AND DESIGN MAY BE MODIFIED. MODIFICATIONS SHALL NOT REDUCE PERIMETER BUILDING SETBACKS FROM PROPERTY LINES AS SHOWN ON THE CDP/FDP.

20. ADDITIONAL SITE FEATURES SUCH AS GAZEBOS, TRELLISES, ENTRANCE SIGNS, LIGHTS AND/OR WALLS NOT REPRESENTED HEREON MAY BE PROVIDED.

21. NO ADDITIONAL IMPROVEMENTS TO THE PUBLIC RIGHT(S) OF WAY ON OR ADJACENT TO THE SUBJECT PROPERTY ARE PROPOSED WITH THIS DEVELOPMENT.

22. AFFORDABLE DWELLING UNITS WILL BE PROVIDED IN ACCORDANCE WITH ARTICLE 2-800 OF THE ZONING ORDINANCE. THE NUMBER OF ADU=S TO BE PROVIDED WILL BE ADJUSTED BASED UPON THE ACTUAL NUMBER OF UNITS CONSTRUCTED. THE NUMBER OF ADU=S TO BE PROVIDED MAY BE REDUCED BASED UPON THE ADOPTION OF FUTURE AMENDMENTS TO THE PROVISIONS OF THE ADU ORDINANCE.

23. THE PROPOSED DEVELOPMENT ON THE SUBJECT PROPERTY WILL NOT POSE ANY ADVERSE EFFECT ON ADJACENT OR NEIGHBORING PROPERTIES.

24. PARKING WILL BE PROVIDED IN ACCORDANCE WITH THE PROVISIONS OF ARTICLE 11 OF THE ZONING ORDINANCE. THE NUMBER OF PARKING SPACES PROVIDED WILL BE ADJUSTED BASED ON THE ACTUAL NUMBER OF UNITS CONSTRUCTED. GARAGES MAY OR MAY NOT BE PROVIDED. IF PROVIDED, THE GARAGES AND ANY TANDEM SPACE BEHIND WILL COUNT AS PART OF THE REQUIRED PARKING SPACES. THE APPLICANT RESERVES THE RIGHT TO PROVIDE MORE THAN THE MINIMUM REQUIRED PARKING. ON SITE PARKING MAY BE LOCATED ON THE SURFACE, BENEATH THE BUILDINGS, OR WITHIN THE BUILDING FOOTPRINT. THE DEVELOPER RESERVES THE RIGHT TO RELOCATE CARPORTS/GARAGES ON THE DEVELOPMENT WITHIN THE PARKING AREAS AS MAY BE NECESSARY DUE TO FINAL ENGINEERING.

25. THERE ARE NO EXISTING EASEMENTS IN EXCESS OF 25 FEET IN WIDTH, OTHER THAN ENTERPRISE DRIVE EASEMENT AS NOTED ON CDP/FDP.

26. IF AN AMENDMENT TO ANY PORTION OF THE CDP/FDP BECOMES NECESSARY AT A LATER DATE, THE APPLICANT RESERVES THE RIGHT TO SUBMIT ONLY THAT PORTION WHICH IS AFFECTED BY THE AMENDMENT FOR PLANNING COMMISSION REVIEW AND APPROVAL.

27. THE DEVELOPER RESERVES THE RIGHT TO LOCATE TEMPORARY CONSTRUCTION/SALES/LEASING TRAILERS ON THE SITE DURING CONSTRUCTION OF THIS PROJECT.

28. THE DEVELOPER RESERVES THE RIGHT TO PROVIDE ACCESS CONTROL FEATURES FOR THE RESIDENTIAL COMPONENT WHICH MAY CONSIST OF ONE OR MORE OF THE FOLLOWING: ENTRY AND EGRESS GATES, GUARDHOUSE(S), PERIPHERAL FENCING AND PEDESTRIAN GATE(S).

29. THE DEVELOPMENT CONFORMS TO THE PROVISIONS OF ALL APPLICABLE LAND DEVELOPMENT ORDINANCES AND ADOPTED STANDARDS WITH THE EXCEPTION OF THE FOLLOWING WAIVERS AND MODIFICATIONS:

WAIVERS AND MODIFIATIONS

A. A WAIVER OF THE 600-FOOT PRIVATE STREET LENGTH LIMITATION IS REQUESTED PURSUANT TO PARAGRAPH 2 OF SECTION 11-102 OF THE ZONING ORDINANCE.
B. A WAIVER OF THE LOADING REQUIREMENT FOR MULTI-FAMILY UNITS IS REQUESTED PURSUANT TO SECTION 11-201 OF THE ZONING ORDINANCE.
C. THE APPLICANT HAS REQUESTED A WAIVER FROM DEM TO ALLOW THE EXISTING WET POND IN THE PROPOSED RESIDENTIAL DEVELOPMENT. THE EXISTING WET POND IS PRIVATELY MAINTAINED.

Application No. RZ 1996-HM-043 Staff DM JAMES
APPROVED DEVELOPMENT PLAN
(DP) (GDP) (CDP) (FDP)
SEE PROFFERS DATED 4-22-98
Date of (BOS) (PC) approval 5-11-98
Sheet 3 of 10

COMMONWEALTH OF VIRGINIA
PETER R. CROWLEY
LICENSE NO. 00184
4-22-98
LANDSCAPE ARCHITECT

Land Design Inc.
Landscape Architecture Land Planning
Urban Design Geographic Information Systems
1414 Prince Street Suite 400 703/549-7784
Alexandria, VA 22314-2815 Fax: 703/549-4984

The Jefferson
at President's Park
Hunter Mill District
Fairfax County, Va.

Notes/ Tabulations/ Bulk Plane
Concept/ Final Development Plan
RZ-96-H-043

REVISIONS
4/22/98

DATE: 1/9/98
DES. JRM DWN. JRM
SCALE: AS SHOWN
PROJECT/FILE NO. 27131
SHEET NO. SHEET 3 OF 10

:\27131\cad\131FDPs3 note tab.dwg Mon Apr 27 12:18:06 1998

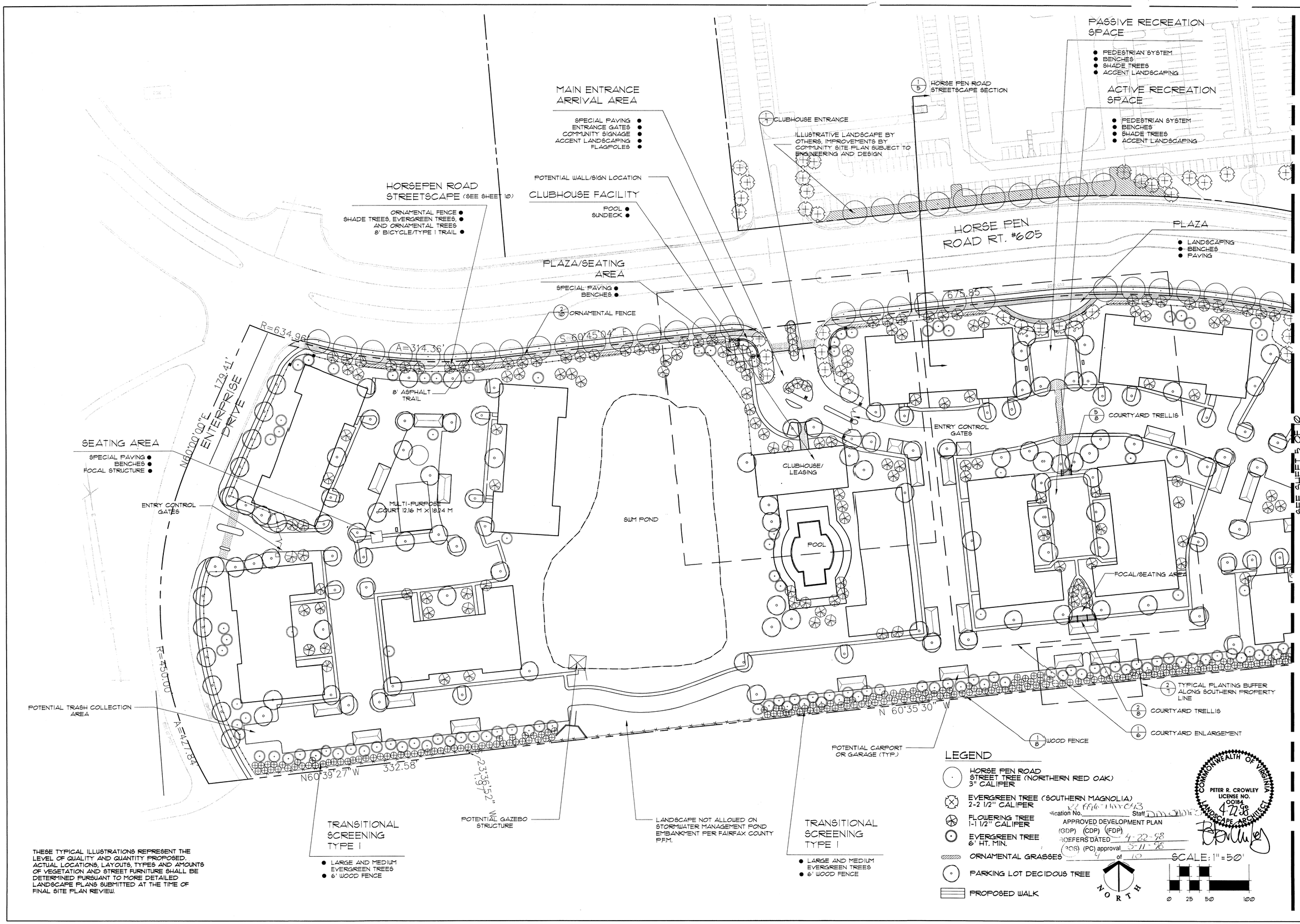

THESE TYPICAL ILLUSTRATIONS REPRESENT THE LEVEL OF QUALITY AND QUANTITY PROPOSED. ACTUAL LOCATIONS, LAYOUTS, TYPES AND AMOUNTS OF VEGETATION AND STREET FURNITURE SHALL BE DETERMINED PURSUANT TO MORE DETAILED LANDSCAPE PLANS SUBMITTED AT THE TIME OF FINAL SITE PLAN REVIEW.

Land Design Inc.
Landscape Architecture Land Planning
Urban Design Geographic Information Systems
1414 Prince Street Suite 400 703/549-7784
Alexandria, VA 22314-2815 Fax: 703/549-4984

The Jefferson at President's Park
Hunter Mill District
Fairfax County, Va.

Landscape/ Amenities Plan
Final Development Plan
RZ-96-H-043

REVISIONS
2/10/98
4/22/98

DATE: 1/9/98
DES. JRM
DWN. JRM
SCALE: AS SHOWN
PROJECT/FILE NO. 27131
SHEET NO. SHEET 4 OF 10

\27131\cad\131FDPs45 land scape.dwg Tue Apr 21 18:14:05 1998

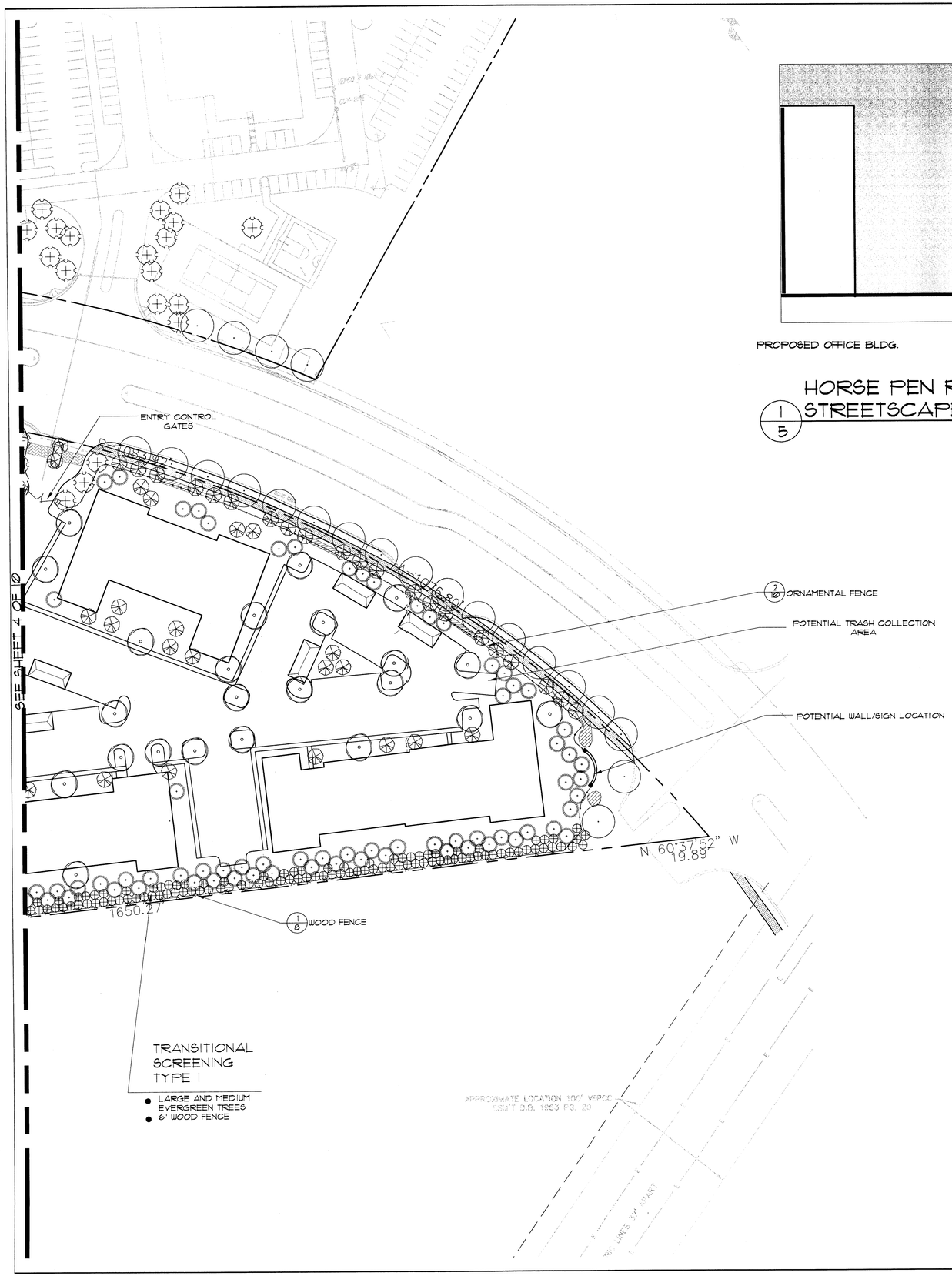

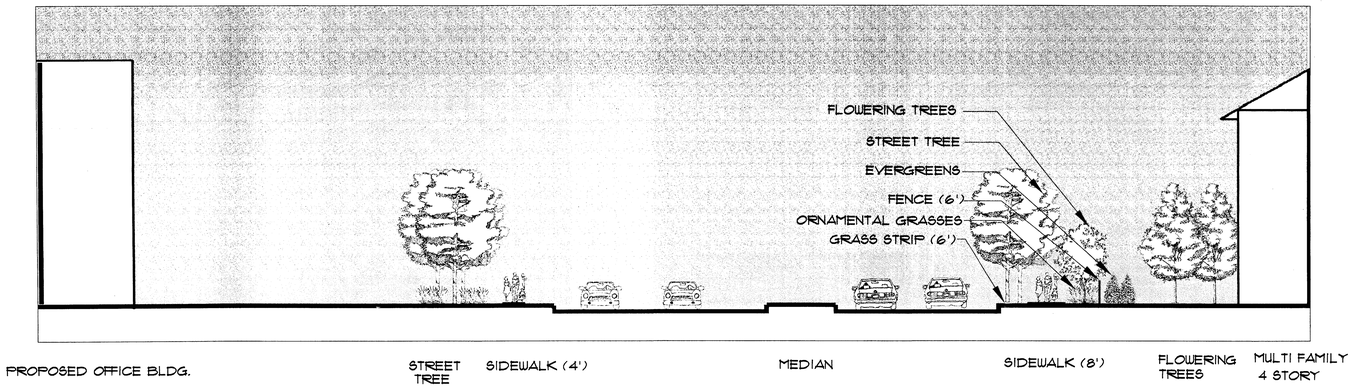

1/5 HORSE PEN ROAD STREETSCAPE SECTION

Land Design Inc.

Application No. RZ 1996-HM-043 Staff DM Simms

APPROVED DEVELOPMENT PLAN

(DP) (GDP) (CDP) (FDP)

SEE PROFFERS DATED 4-22-98

Date of (BOS) (PC) approval 5-11-98

Sheet 5 of 10

LEGEND

- HORSE PEN ROAD STREET TREE (NORTHERN RED OAK) 3" CALIPER
- EVERGREEN TREE (SOUTHERN MAGNOLIA) 2-2 1/2" CALIPER
- FLOWERING TREE 1-1 1/2" CALIPER
- EVERGREEN TREE 6' HT. MIN.
- ORNAMENTAL GRASSES
- PARKING LOT DECIDOUS TREE
- PROPOSED WALK

THESE TYPICAL ILLUSTRATIONS REPRESENT THE LEVEL OF QUALITY AND QUANTITY PROPOSED. ACTUAL LOCATIONS, LAYOUTS, TYPES AND AMOUNTS OF VEGETATION AND STREET FURNITURE SHALL BE DETERMINED PURSUANT TO MORE DETAILED LANDSCAPE PLANS SUBMITTED AT THE TIME OF FINAL SITE PLAN REVIEW.

NORTH

COMMONWEALTH OF VIRGINIA
PETER R. CROWLEY
LICENSE NO. 00184
4-22-98
LANDSCAPE ARCHITECT

SCALE: 1"=50'

0 25 50 100

Land Design Inc.
Landscape Architecture Land Planning
Urban Design Geographic Information Systems
1414 Prince Street Suite 400 703/549-7784
Alexandria, VA 22314-2815 Fax: 703/549-4984

The Jefferson at President's Park
Hunter Mill District
Fairfax County, Va.

Landscape/ Amenities Plan
Final Development Plan
RZ-96-H-043

REVISIONS
2/10/98
4/22/98

DATE: 1/9/98
DES. JRM
DWN. JRM
SCALE: AS SHOWN
PROJECT/FILE NO. 27131
SHEET NO. SHEET 5 OF 10

:\27131\cad\131FDPs45 land scape.dwg Tue Apr 21 18:17:40 1998

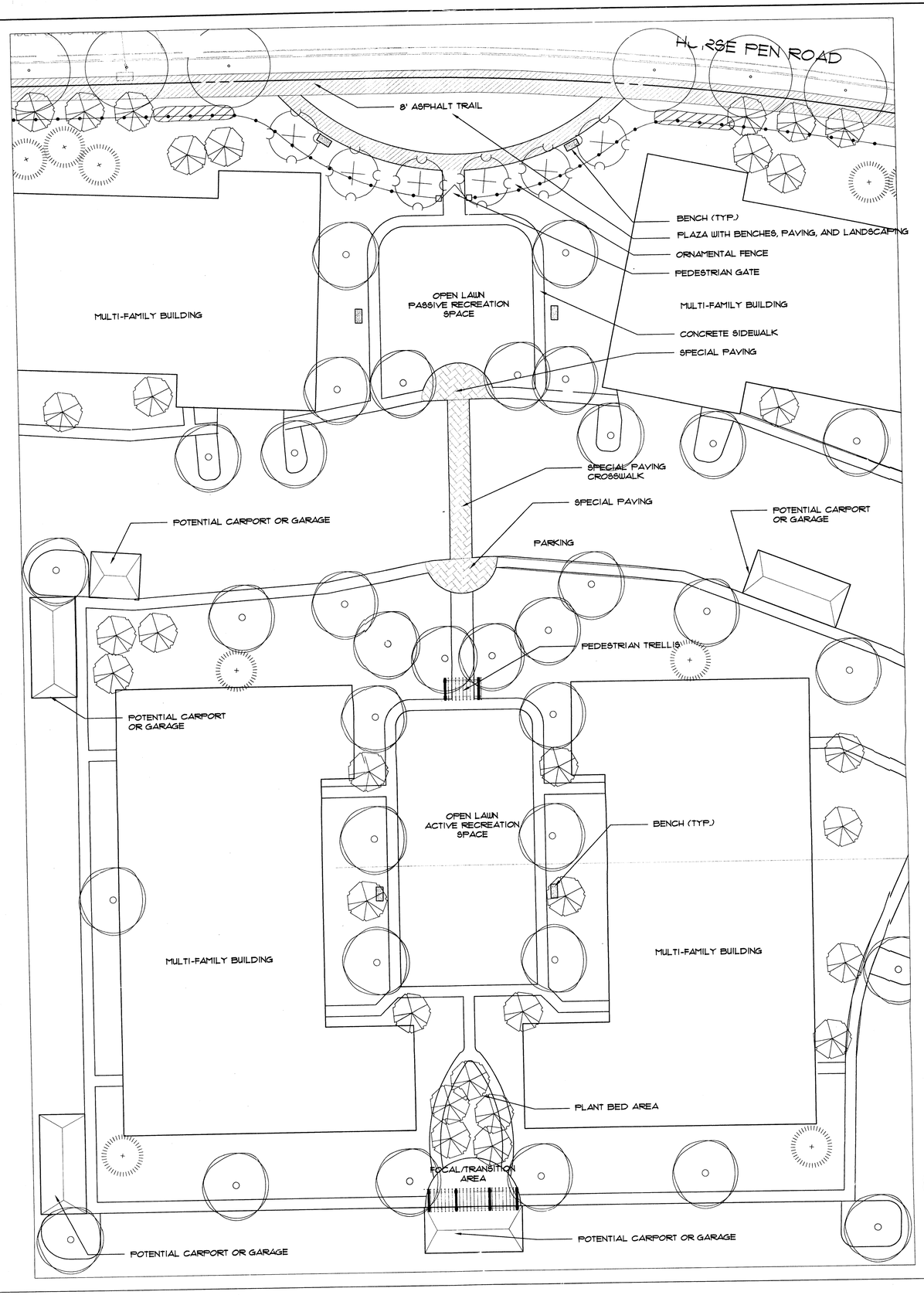

1/6 COURTYARD ENLARGEMENT PLAN

SCALE: 1" = 20'

0 10 20 40

NORTH

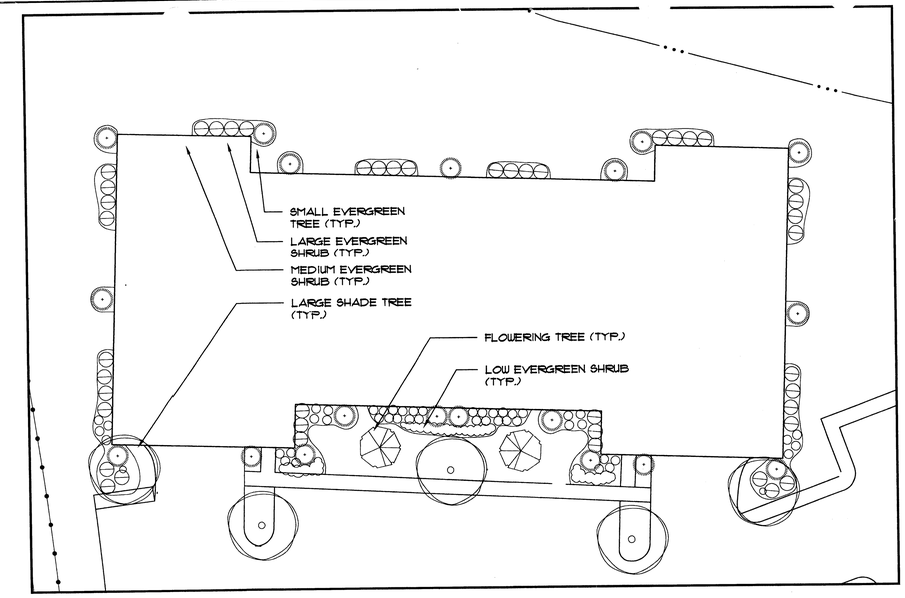

2/6 TYPICAL BUILDING FOUNDATION PLANTING PLAN

SCALE: 1" = 20'

0 10 20 40

NORTH

BUILDING PLANTING LEGEND

LARGE SHADE TREE	2 1/2" CALIPER
FLOWERING TREE	6-8' HEIGHT
SMALL EVERGREEN TREE	3-4' HEIGHT
LARGE EVERGREEN SHRUB	24-30" HEIGHT
MEDIUM EVERGREEN SHRUB	18-24" HEIGHT
LOW EVERGREEN SHRUB	12-15" SPREAD

Application No. RZ 1996-HM-043 Staff JM Somers
APPROVED DEVELOPMENT PLAN
(DP) (GDP) (CDP) (FDP)
SEE PROFFERS DATED 4-22-98
Date of (BOS) (PC) approval 5-11-98
Sheet 6 of 10

THESE TYPICAL ILLUSTRATIONS REPRESENT THE LEVEL OF QUALITY AND QUANTITY PROPOSED. ACTUAL LOCATIONS, LAYOUTS, TYPES AND AMOUNTS OF VEGETATION AND STREET FURNITURE SHALL BE DETERMINED PURSUANT TO MORE DETAILED LANDSCAPE PLANS SUBMITTED AT THE TIME OF FINAL SITE PLAN REVIEW.

COMMONWEALTH OF VIRGINIA
PETER R. CROWLEY
LICENSE NO.
001184
2-10-98
LANDSCAPE ARCHITECT

Land Design Inc.
Landscape Architecture
Urban Design
Land Planning
Geographic Information Systems
1414 Prince Street, Suite 400
Alexandria, VA 22314-2813
Tel: 703/549-4384
Fax: 703/549-4984

The Jefferson at President's Park
Hunter Mill District
Fairfax County, Va.

Courtyard Enlargement/ Typical Building Landscape
Conceptual/ Final Development Plan
RZ-96-H-043

REVISIONS
2/10/98
4/22/98

DATE: 1/9/98
DES. JRM
DWN. JRM
SCALE: AS SHOWN
PROJECT/FILE NO. 27131
SHEET NO. SHEET 6 OF 10

G:\27131\cad\131FDP96 typ bldg 1s.dwg Thu Feb 12 17:26:29 1998

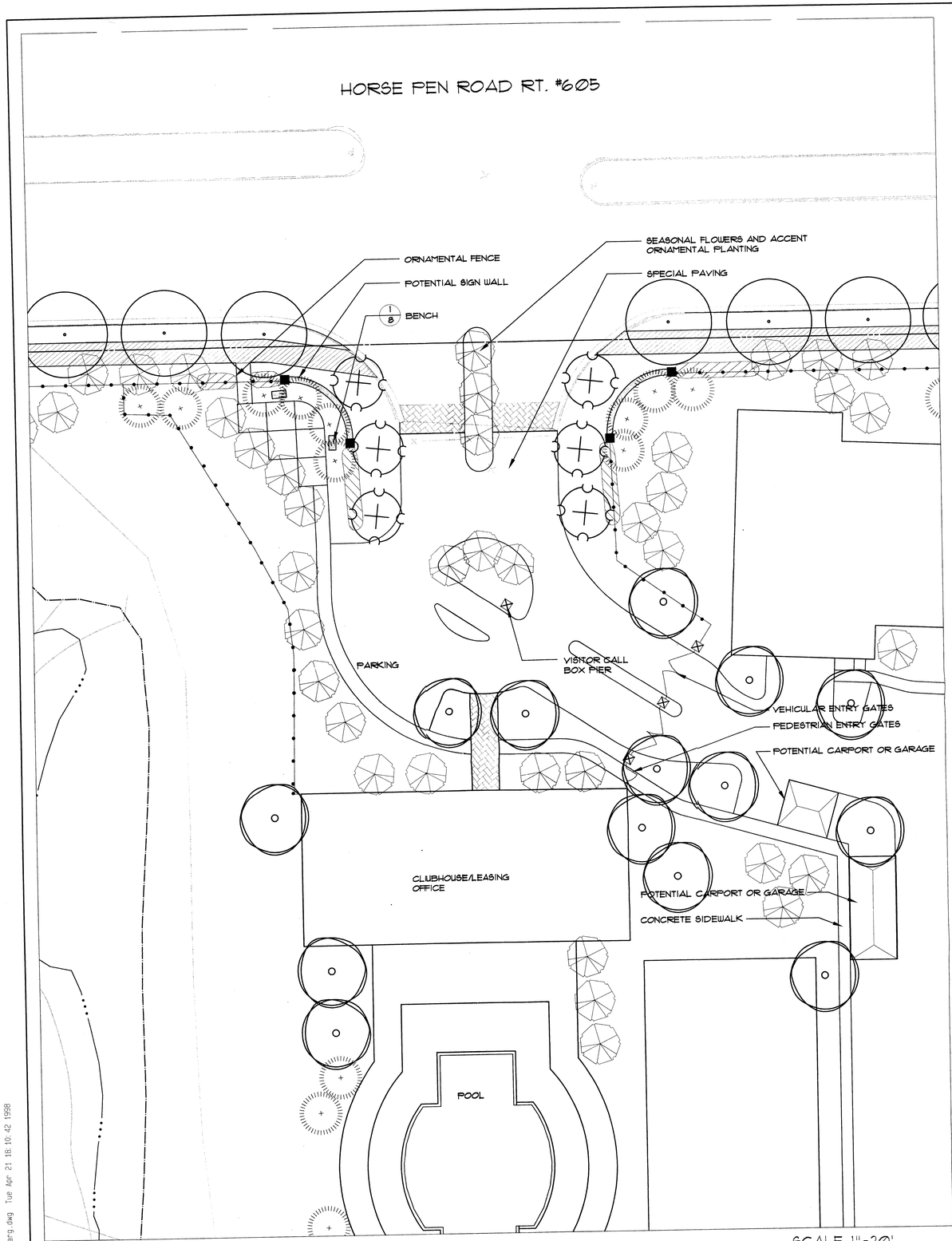

1/7 CLUBHOUSE ENTRANCE OPT. A
PLAN
1"=20'

SCALE: 1"=20'
0 10 20 40

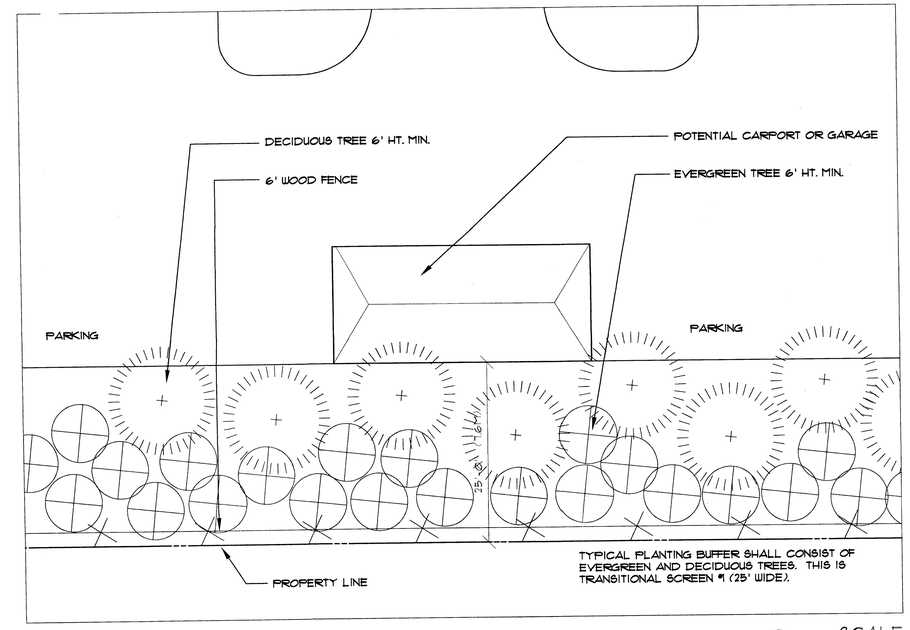

2/7 TYPICAL PLANTING BUFFER ALONG SOUTHERN PROPERTY LINE
PLAN
1"=10'

SCALE: 1"=10'
0 5 10 20

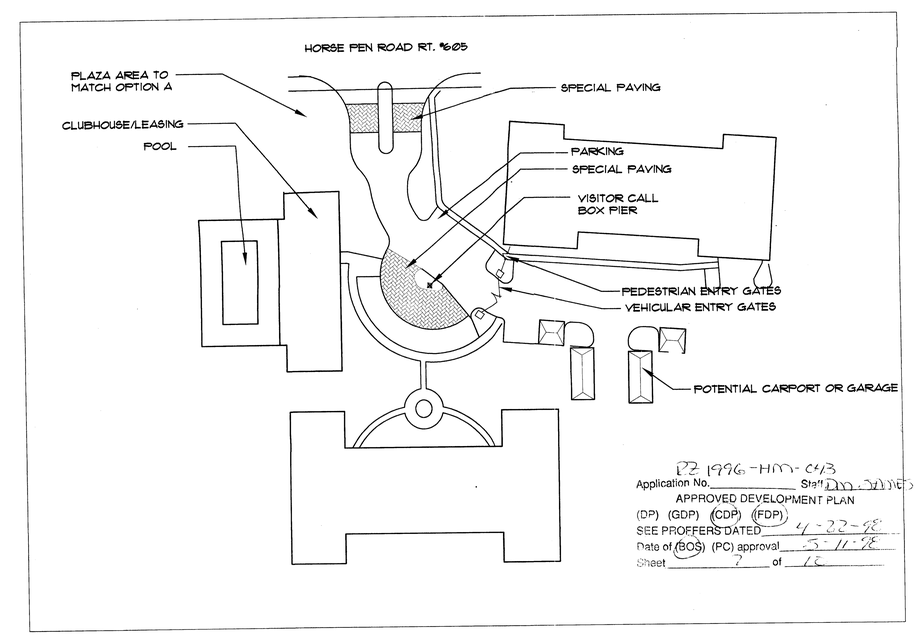

RZ 1996-HM-043
Application No. _____ Staff Dan James
APPROVED DEVELOPMENT PLAN
(DP) (GDP) (CDP) (FDP)
SEE PROFFERS DATED 4-22-98
Date of (BOS) (PC) approval 5-11-98
Sheet 7 of 12

3/7 CLUBHOUSE ENTRANCE OPTION B
PLAN
1"=50'

SCALE: 1"=50'
0 25 50 100

THESE TYPICAL ILLUSTRATIONS REPRESENT THE LEVEL OF QUALITY AND QUANTITY PROPOSED. ACTUAL LOCATIONS, LAYOUTS, TYPES AND AMOUNTS OF VEGETATION AND STREET FURNITURE SHALL BE DETERMINED PURSUANT TO MORE DETAILED LANDSCAPE PLANS SUBMITTED AT THE TIME OF FINAL SITE PLAN REVIEW.

COMMONWEALTH OF VIRGINIA
PETER R. CROWLEY
LICENSE NO. 00184
4-22-98
LANDSCAPE ARCHITECT

Land Design Inc.
Landscape Architecture
Urban Design
Land Planning
Geographic Information Systems
1414 Prince Street Suite 400
Alexandria, VA 22314-2815
703/549-7784
Fax: 703/549-4984

The Jefferson
at President's Park
Hunter Mill District
Fairfax County, Va.

Site Enlargements
Conceptual/ Final Development Plan
RZ-96-H-043

REVISIONS
2/10/98
4/22/98

DATE: 1/9/98
DES. JRM
DWN. JRM
SCALE: AS SHOWN
PROJECT/FILE NO. 27131
SHEET NO. SHEET 7 OF 10

27131\cad\13IFDPS7 ch enlarg.dwg Tue Apr 21 18:10:42 1998

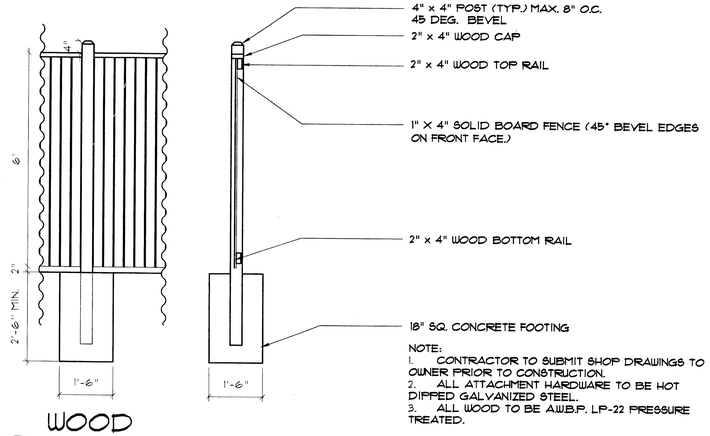

NOTE:
1. CONTRACTOR TO SUBMIT SHOP DRAWINGS TO OWNER PRIOR TO CONSTRUCTION.
2. ALL ATTACHMENT HARDWARE TO BE HOT DIPPED GALVANIZED STEEL.
3. ALL WOOD TO BE A.W.B.P. LP-22 PRESSURE TREATED.

1/8 WOOD SCREEN FENCE
ELEVATION/ SECTION
Land Design Inc. 04A-25
1/2"=1'

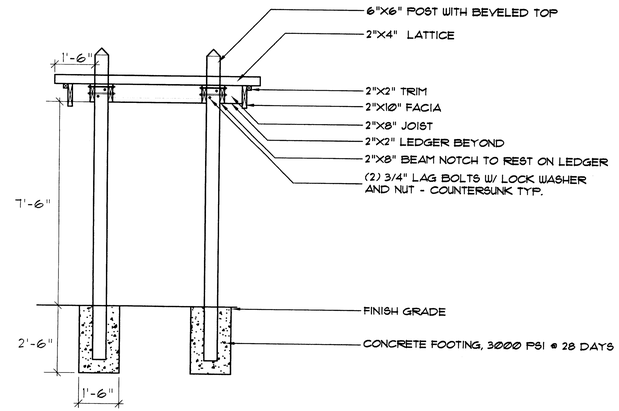

2/8 COURTYARD TRELLIS
SECTION B-B'
Land Design Inc. 02C-23
3/8"=1'0"

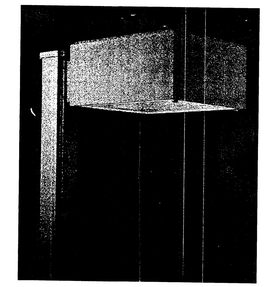

CUTOFF LUMINAIRE
OR SIMILAR

3/8 STREET LIGHT
PICTORIAL
Land Design Inc.
N.T.S.

RZ 1996-HM-043
Application No. _____ Staff DAN JAMES
APPROVED DEVELOPMENT PLAN
(DP) (GDP) (CDP) (FDP)
SEE PROFFERS DATED 4-22-98
Date of (BOS) (PC) approval _____
Sheet 8 of 10

COMMONWEALTH OF VIRGINIA
PETER R. CROWLEY
LICENSE NO.
00184
2-10-98
LANDSCAPE ARCHITECT

Land Design Inc.
Landscape Architecture
Urban Design
Land Planning
Geographic Information Systems
1414 Prince Street, Suite 400
Alexandria, VA 22314-2815
Tel: 703/549-7784
Fax: 703/549-4984

The Jefferson
at President's Park
Hunter Mill District
Fairfax County, Va.

Site Details
Conceptual/ Final Development Plan
RZ-96-H-043

REVISIONS
2/10/98
4/22/98

DATE: 1/9/98
DES. JRM
DWN. JRM
SCALE: AS SHOWN
PROJECT/FILE NO. 27131
SHEET NO. SHEET 8 OF 10

G:\27131\cad\131fdps8 site details.dwg Thu Feb 12 18:41:26 1998

TYPICAL BUILDING ELEVATION

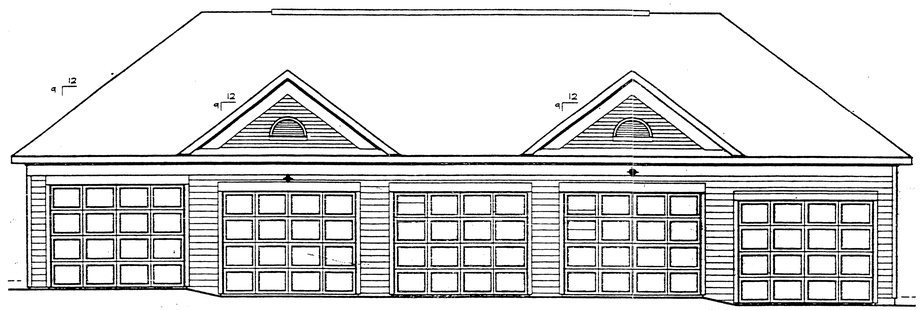

TYPICAL FIVE BAY DETACHED GARAGE ELEVATION

RZ 1996-HM-043
Application No. _____ Staff DM JAMES
APPROVED DEVELOPMENT PLAN
(DP) (GDP) (CDP) (FDP)
SEE PROFFERS DATED 4-22-98
Date of (BOS) (PC) approval 5-11-98
Sheet 7 of 10

COMMONWEALTH OF VIRGINIA
PETER R. CROWLEY
LICENSE NO.
00184
1-9-98
LANDSCAPE ARCHITECT

THESE TYPICAL ILLUSTRATIONS REPRESENT THE CHARACTER AND QUALITY PROPOSED

Land Design Inc.
Landscape Architecture Land Planning
Urban Design Geographic Information Systems
1414 Prince Street Suite 400 703/549-7784
Alexandria, VA 22314-2815 Fax: 703/549-4984

The Jefferson
at President's Park
Hunter Mill District
Fairfax County, Va.

Typical Building Elevation
Final Development Plan
RZ-96-H-043

REVISIONS
2/10/98
4/22/98

DATE: 1/9/98
DES. JRM
DWN. JRM
SCALE: NA
PROJECT/FILE NO. 27131
SHEET NO. SHEET 9 OF 10

\27131\cad\131FDPs9 typ build elev.dwg Thu Jan 08 12:11:35 1998

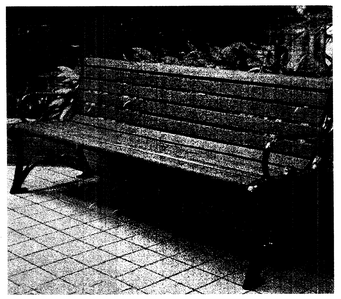

MANUFACTURER : DUMOR, INC.
SITE FURNISHINGS
P.O. BOX 142
MIFFLINTOWN, PA 17059-0142
OR SIMILAR

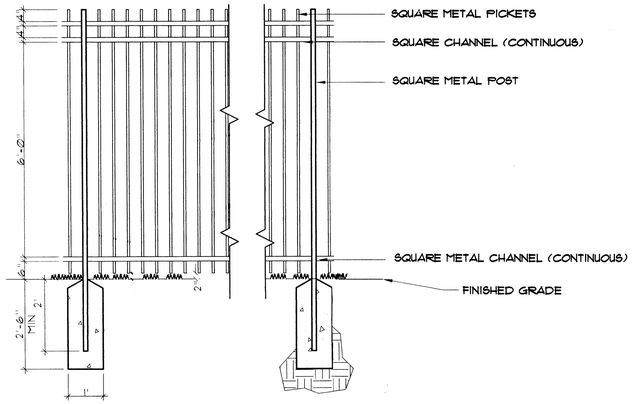

MANUFACTURER : DUMOR, INC.
SITE FURNISHINGS
P.O. BOX 142
MIFFLINTOWN, PA 17059-0142

MODEL: RECEPTACLE 107, 32 GALLON ALL-STEEL
MODEL 107-00, OR SIMILAR

1/10 BENCH — Land Design Inc. — NOT TO SCALE

2/10 ORNAMENTAL FENCE — Land Design Inc. — ELEVATION WITH SECTION — 1/2"=1'-0"

3/10 WASTE RECEPTACLE — Land Design Inc. — PICTORIAL — N.T.S.

DESIGN INTENT

TO PROVIDE A WELL INTEGRATED, AESTHETICALLY PLEASING, AND PEDESTRIAN FRIENDLY STREETSCAPE ATMOSPHERE ALONG HORSE PEN ROAD. THIS IS ACHIEVED BY PROVIDING REGULARLY SPACED STREET TREES, AND ACCESSIBLE PEDESTRIAN PLAZAS AND SITTING AREAS THAT CONTAIN A HARMONIOUS BLEND OF STREETSCAPE ELEMENTS.

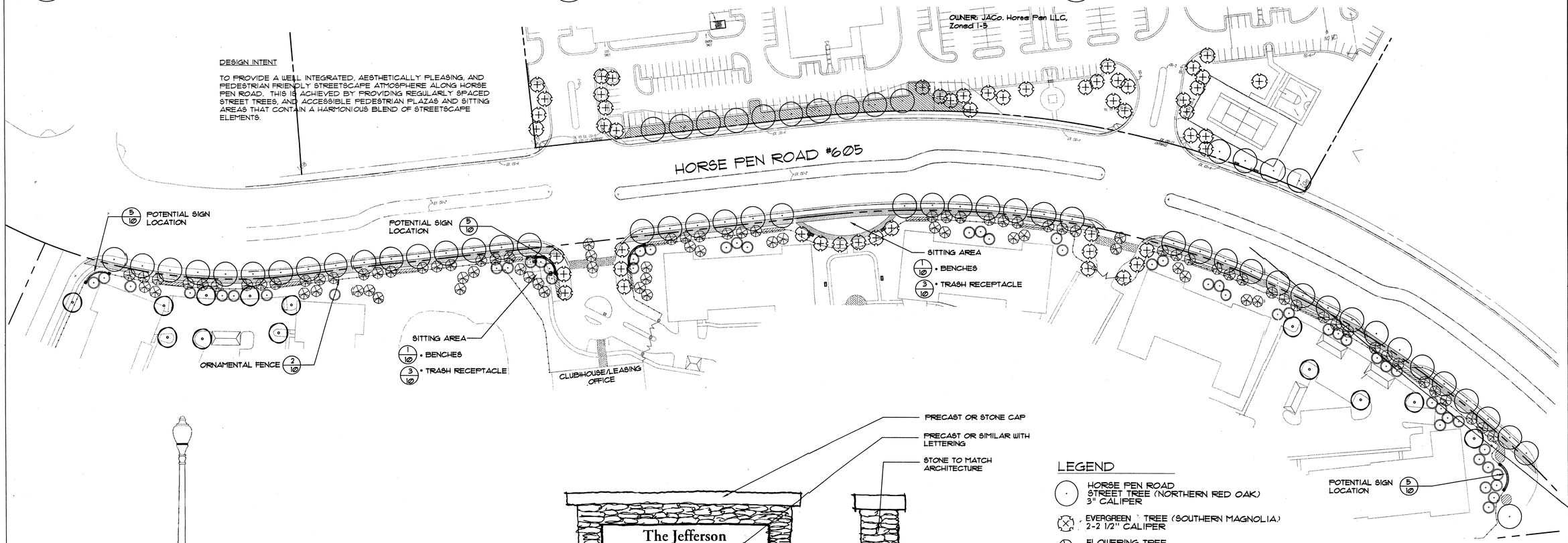

MANUFACTURER: W.J. WHATLEY
OR SIMILAR

MODEL: METAL SHAFT WITH
ACORN GLOBE OR SIMILAR

4/10 STREET LIGHT — Land Design Inc. — 05B-11 — PICTORIAL — N.T.S.

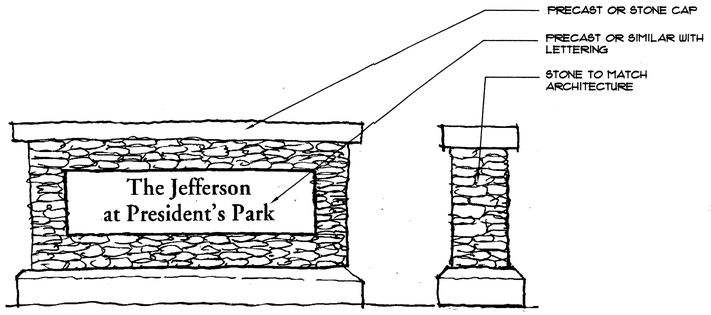

5/10 SCHEMATIC SIGN — Land Design Inc. — ELEVATION — NO SCALE

LEGEND

- HORSE PEN ROAD STREET TREE (NORTHERN RED OAK) 3" CALIPER
- EVERGREEN TREE (SOUTHERN MAGNOLIA) 2-2 1/2" CALIPER
- FLOWERING TREE 1-1 1/2" CALIPER
- EVERGREEN TREE 6' HT. MIN.
- ORNAMENTAL GRASSES
- PARKING LOT DECIDUOUS TREE
- BENCH

THESE TYPICAL ILLUSTRATIONS REPRESENT THE LEVEL OF QUALITY AND QUANTITY PROPOSED. ACTUAL LOCATIONS, LAYOUTS, TYPES AND AMOUNTS OF VEGETATION AND STREET FURNITURE SHALL BE DETERMINED PURSUANT TO MORE DETAILED LANDSCAPE PLANS SUBMITTED AT THE TIME OF FINAL SITE PLAN REVIEW.

COMMONWEALTH OF VIRGINIA
PETER R. CROWLEY
LICENSE NO. 00184
2-10-98
LANDSCAPE ARCHITECT

RZ 1996-HM-043
Application No. _____ Staff [illegible]
APPROVED DEVELOPMENT PLAN
(DP) (GDP) (CDP) (FDP)
SEE PROFFERS DATED 4-27-98
Date of (BOS) (PC) approval [illegible]
Sheet 10 of 10

NORTH

SCALE: 1"=60'
0 30 60 120

Land Design Inc.
Landscape Architecture
Urban Design
Land Planning
Geographic Information Systems
1414 Prince Street Suite 400
Alexandria, VA 22314-2815
703/549-7784
Fax: 703/549-4984

The Jefferson at President's Park
Hunter Mill District
Fairfax County, Va.

Horse Pen Raod Streetscape Plan
Final Development Plan
RZ-96-H-043

REVISIONS
4/22/98

DATE: 2/10/98
DES. JRM
DWN. JRM
SCALE: AS SHOWN
PROJECT/FILE NO. 27131
SHEET NO. SHEET 10 OF 10

3:\27131\cad\131FDPs10 street scape.dwg Thu Feb 12 18:27:57 1998