DAVIS / FRYING PAN ROAD

ORIGINAL APPLICATION NO. RZ 93-H-032

FINAL DEVELOPMENT PLAN AMENDMENT

HUNTER MILL DISTRICT
FAIRFAX COUNTY, VIRGINIA

SHEET INDEX

1. COVER SHEET
2. FINAL DEVELOPMENT PLAN AMENDMENT
3. NOTES, TABULATIONS, ELEVATION & EXHIBITS

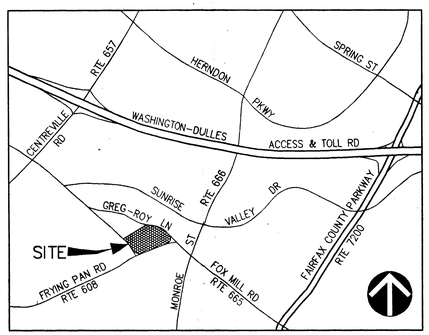

VICINITY MAP
SCALE: 1"=2000'

OWNER
RICHARD N. DAVIS, TRUSTEE

APPLICANT
AVALON PROPERTIES
2900 EISENHOWER AVENUE
3rd FLOOR
ALEXANDRIA, VIRGINIA 22314
(703) 329-6300

ARCHITECTS
THE LESSARD ARCHITECTURAL GROUP
8603 WESTWOOD CENTER DRIVE
SUITE 400
VIENNA, VIRGINIA 22182
(703) 760-9344

LANDSCAPE ARCHITECTS
LAND DESIGN
1414 PRINCE STREET
ALEXANDRIA, VIRGINIA 22314
(703) 549-7784

ENGINEER
VIKA INC.
8180 GREENSBORO DRIVE
SUITE 200
MCLEAN, VIRGINIA 22102
(703) 442-7800

Application No. FDPA 93-H-032 Staff dm/bms
APPROVED DEVELOPMENT PLAN
(DP) (GDP) (CDP) (FDP)
SEE PROFFERS DATED dw cond 5/27/98
Date of (BOS) (PC) approval 5/27/98
Sheet 1 of 3

RECEIVED
OFFICE OF COMPREHENSIVE PLANNING
APR 6 1998
ZONING EVALUATION DIVISION

COMMONWEALTH OF VIRGINIA
JOHN E. AVATETTI
No. 11447
12/12/97
PROFESSIONAL ENGINEER

△ REVISED 3-25-98

DECEMBER 12, 1997

DWG 6094101A
AV 4.37
SCALE: 1"=1'
DATE:

GREG-ROY LANE
ROUTE 2520

FOXMILL ROAD ROUTE 665

FOXMILL ROAD NORTH CONNECTOR

FRYING PAN ROAD

OUTLOT "A"
DB 8030 PG 1141

MATCH LINE ~ SEE THIS SHEET

FUTURE RIGHT & LEFT TURN LANES TO BE PROVIDED BY OTHERS PER RZ 92-C-009

EXISTING VEGETATION TO BE PRESERVED/ LIMITS OF CLEARING & GRADING

PROPERTY LINE AND LIMITS OF CLEARING & GRADING

POTENTIAL 1.33m BERM (1m MAX HT)

TOT LOT

CLUBHOUSE

APPROX. POOL LOCATION

PROPOSED POOL BLDG.

PROPOSED MAINTENANCE BUILDING

LIMITS OF CLEARING & GRADING

POTENTIAL TRASH COMP LOCATION

PROPOSED SWM/BMP DRY POND (2549 CM ±)

PROPOSED 12" SAN SEWER BY OTHERS

4.57m SAN SEW ESMT

EX 4.57m VIRGINIA ELECTRIC ESMT DB 9015 PG 1141

R=333.067m (1092.74ft)
L=76.877m (252.22ft)

R=59.625m (195.62ft)
L=46.214m (151.62ft)

R=82.77m (271.56ft)
L=45.45m (149.14ft)

R=329.411m (1080.74ft)
L=144.291m (473.10ft)

R=1154.502m
L=18.932m
(R=38.00ft)
(L=60.81ft)

R=304.782m (1000.00ft)
L=14.594m (47.90ft)

R=78.029m
L=20.101m
(R=256.00ft)
(L=65.93ft)

R=74.368m
L=13.078m
(R=243.99ft)
(L=42.74ft)

NEW 1.2m SW

PROPOSED R/W

PROPOSED R/W DEDICATION

EXISTING VEGETATION TO BE PRESERVED/ LIMITS OF CLEARING & GRADING

REFER TO SHEET 3 OF 3 FOR ENTRANCE FEATURE DETAIL

RELOCATION OF FOX MILL RD/GREG-ROY LN TO BE PROVIDED BY OTHERS (RZ 87-C-060 McNAIR FARMS)

APPROX LOC OF EX BARRIER

PROP RIGHT TURN IN/OUT ONLY

APPROX LOC EX 300 W RIGHT TURN LANE

EX 300 W TAPER

PROPERTY LINE AND LIMITS OF CLEARING & GRADING

APPROX LOC EX 300 W

LEGEND

- 200 S — APPROX LOC OF NEW SAN SEWER
- PES — POTENTIAL ENTRY SIGN
- ▼ — BUILDING ENTRANCE
- 7 — NUMBER OF PARKING SPACES
- (7) — BUILDING NUMBER
- NEW PAINTED CROSSWALK
- EX INDEX CONTOUR
- EX CONTOUR

LANDSCAPE LEGEND

- PROPOSED DECIDUOUS TREE 2" – 2 1/2" CAL. MIN.
- PROPOSED ORNAMENTAL TREE 6' – 8' HT. MIN.
- PROPOSED EVERGREEN TREE 6' – 7' HT. MIN.

COMMONWEALTH OF VIRGINIA
CHRIS MASSEY
No. 11447
3/31/98
PROFESSIONAL ENGINEER

VA STATE GRID NORTH

GRAPHIC SCALE
(IN METERS)
10 0 5 10 20 30 40 50

1 : 500

Application No. FDP 93-H-032 Staff
APPROVED DEVELOPMENT PLAN
(DP) (GDP) (CDP) (FDP)
SEE PROFFERS DATED Dev. Conditions 5/23/98
Date of (BOS) (PC) approval 5/23/98
Sheet 2 of 3

NO.	DESCRIPTION	REVIEW BY	APPROVED	DATE

REVISION APPROVED BY:
DIVISION OF DESIGN REVIEW

VIKA

ENGINEERS ■ PLANNERS ■ LANDSCAPE ARCHITECTS ■ SURVEYORS ■ CONSTRUCTION INSPECTORS

VIKA INCORPORATED
8180 GREENSBORO DRIVE, SUITE 200 ■ McLEAN, VIRGINIA 22102
(703)442-7800 ■ FAX (703)761-2797
McLEAN, VA FREDERICK, MD

DAVIS/FRYING PAN ROAD

HUNTER MILL DISTRICT
FAIRFAX COUNTY, VIRGINIA

FINAL DEVELOPMENT PLAN AMENDMENT

VIKA• REVISIONS
3-25-98

DATE: DEC 12, 1997
DES. SFT
DWN. CADD
SCALE: 1:500 METRIC
PROJECT/FILE NO. 6094
SHEET NO. 2 OF 3

DWG: 6094101

NOTES:

1. THE PROPERTY THAT IS THE SUBJECT OF THIS CONCEPTUAL/FINAL DEVELOPMENT PLAN AMENDMENT (CDPA/FDPA) IS IDENTIFIED ON THE FAIRFAX COUNTY ZONING MAP AS 16-3 ((1)) 24 (PART) AND 16-4 ((1)) 30. THE OWNER OF THE PROPERTY IS RICHARD N. DAVIS, TRUSTEE, AND THE APPLICANT IS AVALON PROPERTIES, INC.

2. THE BOUNDARY INFORMATION SHOWN HEREON IS BY VIKA, INC.

3. THE TOPOGRAPHY SHOWN HEREON IS AT A CONTOUR INTERVAL OF TWO (2) FEET BY AIR SURVEY BY DEWBERRY & DAVIS (D&D).

4. STORMWATER DETENTION WILL BE PROVIDED IN ACCORDANCE WITH FAIRFAX COUNTY ORDINANCES UNLESS MODIFIED BY PROFFERED CONDITION AND/OR WAIVER. AT THIS TIME, IT IS ANTICIPATED THAT STORMWATER MANAGEMENT/BEST MANAGEMENT PRACTICE REQUIREMENTS FOR THE PROPERTY WILL BE SATISFIED THROUGH AN EXTENDED STORMWATER MANAGEMENT WET POND. THE VOLUME REPRESENTED FOR THE DETENTION FACILITY SHOWN HEREON IS BASED ON PRELIMINARY ENGINEERING AND IS APPROXIMATE. THE DETENTION VOLUME IS SUBJECT TO REVISION AT THE TIME OF FINAL ENGINEERING.

5. THE FOOTPRINTS OF THE BUILDINGS SHOWN HEREON ARE PRELIMINARY AND SUBJECT TO MINOR MODIFICATION WITH FINAL ENGINEERING AND DESIGN IN ACCORDANCE WITH PAR. 4 OF SECT. 16-403 OF THE ZONING ORDINANCE. IN ADDITION, THE APPLICANT RESERVES THE RIGHT TO BUILD FEWER DWELLING UNITS THAN THE TOTAL REPRESENTED IN THE TABULATION AND REDUCE THE BUILDING FOOTPRINTS, NUMBER OF UNITS AND ASSOCIATED PARKING SPACES ACCORDINGLY.

6. IT IS TO BE UNDERSTOOD THAT SOME OF THE MULTIPLE FAMILY DWELLING UNITS MAY HAVE INDIVIDUAL EXTERIOR ENTRANCES.

7. PLANS AND ELEVATIONS OF THE PROPOSED MULTIPLE FAMILY DWELLINGS ARE REPRESENTED ON THE GRAPHIC. BUILDINGS 2 THROUGH 7 WILL HAVE A MAXIMUM HEIGHT OF 38 FEET AS DEFINED IN THE FAIRFAX COUNTY ZONING ORDINANCE. IN ADDITION, THE SIDES OF THESE SIX BUILDINGS THAT FACE THE GREG ROY SUBDIVISION WILL HAVE THE SAME MATERIALS AND ARCHITECTURAL EMBELLISHMENTS AS ARE USED ON THE BUILDING FRONTS.

8. IN ACCORDANCE WITH PAR. 4 OF SECT. 16-403 OF THE ZONING ORDINANCE, MINOR MODIFICATIONS TO THE SIZES, DIMENSIONS, FOOTPRINTS AND LOCATIONS OF BUILDINGS, SIDEWALKS/TRAILS, AND UTILITIES MAY OCCUR WITH FINAL ENGINEERING AND DESIGN.

9. THE SITE WILL BE SERVED BY PUBLIC WATER AND SEWER.

10. IT IS TO BE UNDERSTOOD THAT ADDITIONAL SITE FEATURES SUCH AS CARPORTS, GARAGES, GAZEBOS, TRELLISES, PLANTERS, ENTRANCE SIGNS AND/OR WALLS AND LIGHT STANDARDS NOT REPRESENTED HEREON MAY BE PROVIDED. THE LIGHT STANDARDS WILL BE LOCATED THROUGHOUT THE DEVELOPMENT TO PROVIDE A SAFE ENVIRONMENT AND WILL BE SO DESIGNED TO CONFORM WITH THE GLARE PERFORMANCE STANDARDS SET FORTH IN ARTICLE 14 OF THE ZONING ORDINANCE.

11. AT THIS TIME, TRASH PICK UP IS PLANNED TO BE AT A CENTRAL TRASH COMPACTOR AS SHOWN. IT IS UNDERSTOOD THAT A FUTURE DECISION MAY BE MADE TO ELIMINATE THE TRASH COMPACTOR AND REPLACE IT WITH SMALLER COLLECTOR AREAS AND/OR CURBSIDE PICKUP.

12. THE LIMITS OF CLEARING AND GRADING AND THE LANDSCAPED OPEN AREAS REPRESENTED ON THE GRAPHIC ARE PRELIMINARY AND SUBJECT TO MODIFICATION AT THE TIME OF FINAL ENGINEERING AND DESIGN. LANDSCAPING AND TREE COVER CONSISTING OF A COMBINATION OF EVERGREENS AND DECIDUOUS TREES WILL BE PROVIDED IN ACORDANCE WITH APPLICABLE PROVISIONS OF ARTICLE 13.

13. A CLUBHOUSE WITH A FITNESS CENTER, A CLUB ROOM, A POTENTIAL SWIMMING POOL AND A TOT LOT ARE PROPOSED AS SHOWN TO SERVE THE RESIDENTS OF THE PLANNED COMMUNITY.

14. THERE IS A CLUSTER OF OAK TREES ON THE WESTERN PORTION OF THE SITE THAT IS A SCENIC ASSET AND NATURAL FEATURE DESERVING OF PROTECTION AND PRESERVATION WHICH THE APPLICANT PROPOSES TO DO AS REPRESENTED ON THE GRAPHIC.

15. THE NUMBER OF REQUIRED AND PROVIDED PARKING SPACES REPRESENTED IN THE TABULATION IS BASED ON THE PROPOSED NUMBER OF DWELLING UNITS. IT IS TO BE UNDERSTOOD THAT THE NUMBER OF PARKING SPACES MAY BE INCREASED OR DECREASED FROM THE NUMBER REPRESENTED IN THE TABULATION AND THE GRAPHIC AS LONG AS THE AMOUNT OF OPEN SPACE REPRESENTED IN THE TABULATION IS PROVIDED AND THE MINIMUM DIMENSIONS TO PERIPHERAL LOT LINE ARE NOT DIMINISHED. THE FINAL NUMBER OF PARKING SPACES WILL BE DETERMINED AT THE TIME OF SITE PLAN SUBMISSION AND AT LEAST A MINIMUM NUMBER WILL BE PROVIDED IN ACORDANCE WITH THE PROVISIONS OF ARTICLE II OF THE ZONING ORDINANCE. ON SITE PARKING MAY BE LOCATED ON THE SURFACE, BENEATH DWELLINGS AND/OR IN PARKING STRUCTURES. IF PROVIDED, GARAGES AND ANY TANDEM SPACES BEHIND SUCH WILL COUNT AS PART OF THE REQUIRED PARKING SPACES.

16. TO THE BEST OF OUR KNOWLEDGE, THERE ARE NO GRAVES LOCATED ON THE SUBJECT PROPERTY.

17. TO THE BEST OF OUR KNOWLEDGE, THERE ARE NO EXISTING UTILITY EASEMENTS HAVING A WIDTH OF 25 FEET OR MORE LOCATED ON THE SUBJECT PROPERTY.

18. THERE IS NO FLOODPLAIN DESIGNATED BY THE FEDERAL INSURANCE ADMINISTRATION, UNITED STATES GEOLOGICAL SURVEY, OR FAIRFAX COUNTY OR ANY RESOURCE PROTECTION AREA LOCATED ON THE SUBJECT PROPERTY. IT IS OUR JUDGMENT THAT THE EXISTING STREAM CHANNEL LOCATED ON THE EASTERN PORTION OF THE SUBJECT PROPERTY IS NOT AN ENVIRONMENTAL QUALITY CORRIDOR GIVEN THAT IT HAS BEEN DISTURBED AS A RESULT OF PUBLIC ROAD IMPROVEMENTS AND NO LONGER BENEFITS HABITAT QUALITY, CONNECTEDNESS, AESTHETICS OR POLLUTION REDUCTION. THIS AREA WILL BE PRESERVED, HOWEVER, AS REPRESENTED ON THE GRAPHIC.

19. TO THE BEST OF OUR KNOWLEDGE, THERE ARE NO HAZARDOUS OR TOXIC SUBSTANCES STORED ON THE SUBJECT PROPERTY. FURTHER, THE PROPOSED USE(S) WILL COMPLY WITH ALL CURRENT APPLICABLE STATE REGULATIONS REGARDING THE UTILIZATION, STORAGE, TREATMENT OR DISPOSAL OF SUCH SUBSTANCES ON THE PROPERTY.

20. THERE ARE NO EXISTING STRUCTURES LOCATED ON THE SUBJECT PROPERTY.

21. A DEVELOPMENT SCHEDULE HAS NOT BEEN ESTABLISHED BY THE APPLICANT AT THIS TIME.

22. THE PROPERTY IS LOCATED IN SUB-UNIT B-2 OF THE RESTON-HERNDON SUBURBAN CENTER OF THE UPPER POTOMAC PLANNING DISTRICT OF AREA III OF THE COMPREHENSIVE PLAN AND IS PLANNED FOR RESIDENTIAL USE AT 8-12 DWELLING UNITS PER ACRE. THE PROPOSED DEVELOPMENT IS IN CONFORMANCE WITH THAT RECOMMENDATION.

23. THE COMPREHENSIVE PLAN RECOMMENDS A TRAIL ON THE SOUTHERN SIDE OF FRYING PAN ROAD THAT WILL BE CONSTRUCTED BY OTHERS. SIDEWALKS WILL BE PROVIDED AS REPRESENTED ON THE GRAPHIC. IN ADDITION, IF REQUIRED BY THE DIRECTOR, IN CONSULTATION WITH APPROPRIATE STAFF OF THE SCHOOL BOARD, AT TIME OF SITE PLAN SUBMISSION A FOUR (4) FOOT WIDE ASPHALT TRAIL WILL BE PROPOSED TO ACCOMMODATE OFF-SITE PEDESTRIAN TRAFFIC ORIENTED TO THE NEARBY ELEMENTARY SCHOOL. SAID TRAIL WILL BE LOCATED WITHIN THE RIGHT-OF-WAY OF THAT SECTION OF FOX MILL ROAD THAT BORDERS THE NORTHWESTERN EDGE OF THE SITE IF SAID TRAIL CAN BE DESIGNED IN A SAFE ALIGNMENT GIVEN NO IMPROVEMENT TO THE EXISTING CROSS-SECTION OF FOX MILL ROAD.

24. A STATEMENT OF THE PUBLIC IMPROVEMENTS THAT ARE PROPOSED FOR DEDICATION AND/OR CONSTRUCTION AND AN ESTIMATE OF THE TIMING OF PROVIDING SUCH IMPROVEMENTS IS SPECIFIED IN THE PROFFERS.

25. EXCEPT WHERE NOTED HEREON, TO THE BEST OF OUR KNOWLEDGE THE PROPOSED DEVELOPMENT OF THE SUBJECT PROPERTY CONFORMS TO ALL CURRENT APPLICABLE LAND DEVELOPMENT ORDINANCES, REGULATIONS AND ADOPTED STANDARDS.

26. THE MAXIMUM GFA FOR USES OTHER THAN DWELLINGS IS 5,000 SF.

WAIVERS REQUESTED

1. A MODIFICATION OF THE TRANSITIONAL SCREENING AND THE BARRIER REQUIREMENTS ALONG THE NORTHWESTERN AND NORTHEASTERN PROPERTY LINES IS HEREBY REQUESTED PURSUANT TO PARAGRAPHS 3 AND 5 OF SECTION 13-304 OF THE ZONING ORDINANCE.

   A MODIFICATION OF THE TRANSITIONAL SCREENING AND BARRIER REQUIREMENTS ALONG FOX MILL ROAD NORTH CONNECTOR AND FRYING PAN ROAD IS HEREBY REQUESTED PURSUANT TO PAR. 3 OF SECT. 13-304 OF THE ZONING ORDINANCE.

2. A WAIVER OF ARTICLE 11-201 OFF-STREET LOADING FOR THE THIS PROJECT IN THE PDH-12 ZONING DISTRICT IS HEREBY REQUESTED.

3. A WAIVER OF THE 600-FOOT MAXIMUM PRIVATE STREET LENGTH REQUIREMENT TO THE ZONING ORDINANCE ARTICLE 11, PART 302 IS HEREBY REQUESTED.

TABULATION

EXISTING ZONING	PDH-12
PROPOSED ZONING	PDH-12
TOTAL SITE AREA	5.1895 HECTARES (12.82± AC)
PROPOSED NUMBER OF MULTIPLE FAMILY DWELLING UNITS	165*
BASE UNITS	150
BONUS UNITS	4*
AFFORDABLE DWELLING UNITS	11*
PROPOSED DENSITY (WITHOUT AFFORDABLE DWELLING UNITS AND BONUS UNITS)	28.91 DU/h (11.70 DU/AC)
PROPOSED DENSITY (WITH AFFORDABLE DWELLING UNITS AND BONUS UNITS)	31.80 DU/h (12.87 DU/AC)
OPEN SPACE REQUIRED (5.189542 h x 27%)	1.4012 HECTARES (3.46 AC)
OPEN SPACE PROVIDED	2.6925 HECTARES (51%) (6.65 AC)
PARKING SPACES REQUIRED (1.6/D.U.)	264 SPACES
PARKING SPACES PROVIDED	343 SPACES **
MAXIMUM BUILDING HEIGHT	12.19m (40 FT) (MAX 4 STORIES)

* THE AFFORDABLE DWELLING UNITS AND BONUS UNITS ARE PROPOSED IN ACCORDANCE WITH THE PROVISIONS OF SECTION 2-604 OF THE ZONING ORDINANCE.

** INCLUDING GARAGES, TANDEM DRIVEWAY SPACES AND HANDICAP SPACES.

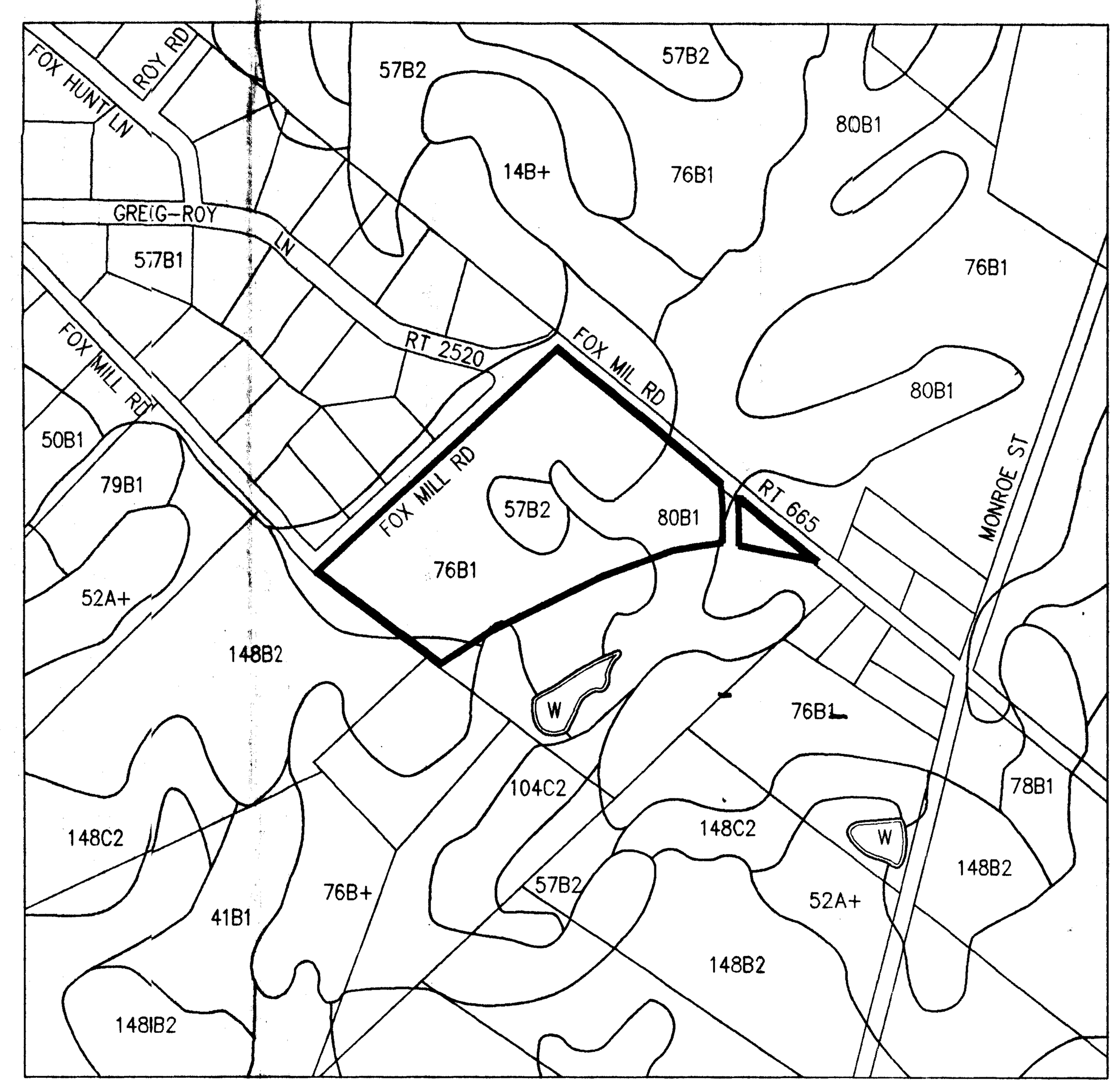

SOILS MAP

SCALE: 1"=500'

SOIL #	SOIL NAME	SUBSURFACE DRAINAGE	FOUNDATION SUPPORT	SLOPE STABILITY	EROSION POTENTIAL	PROBLEM CLASS	INFILTRATION BMP TRENCHES
57B2	BRENNOCK	GOOD	GOOD	GOOD	MODERATE	C	MARGINAL
76B1	CALVERTON	MARGINAL	POOR	GOOD	SLIGHT	A	POOR
80B1	CROTON	POOR	POOR	GOOD	SLIGHT	A	POOR
148B2	IREDELL-MECKLENBURG	MARGINAL	POOR	GOOD	MODERATE	A	POOR

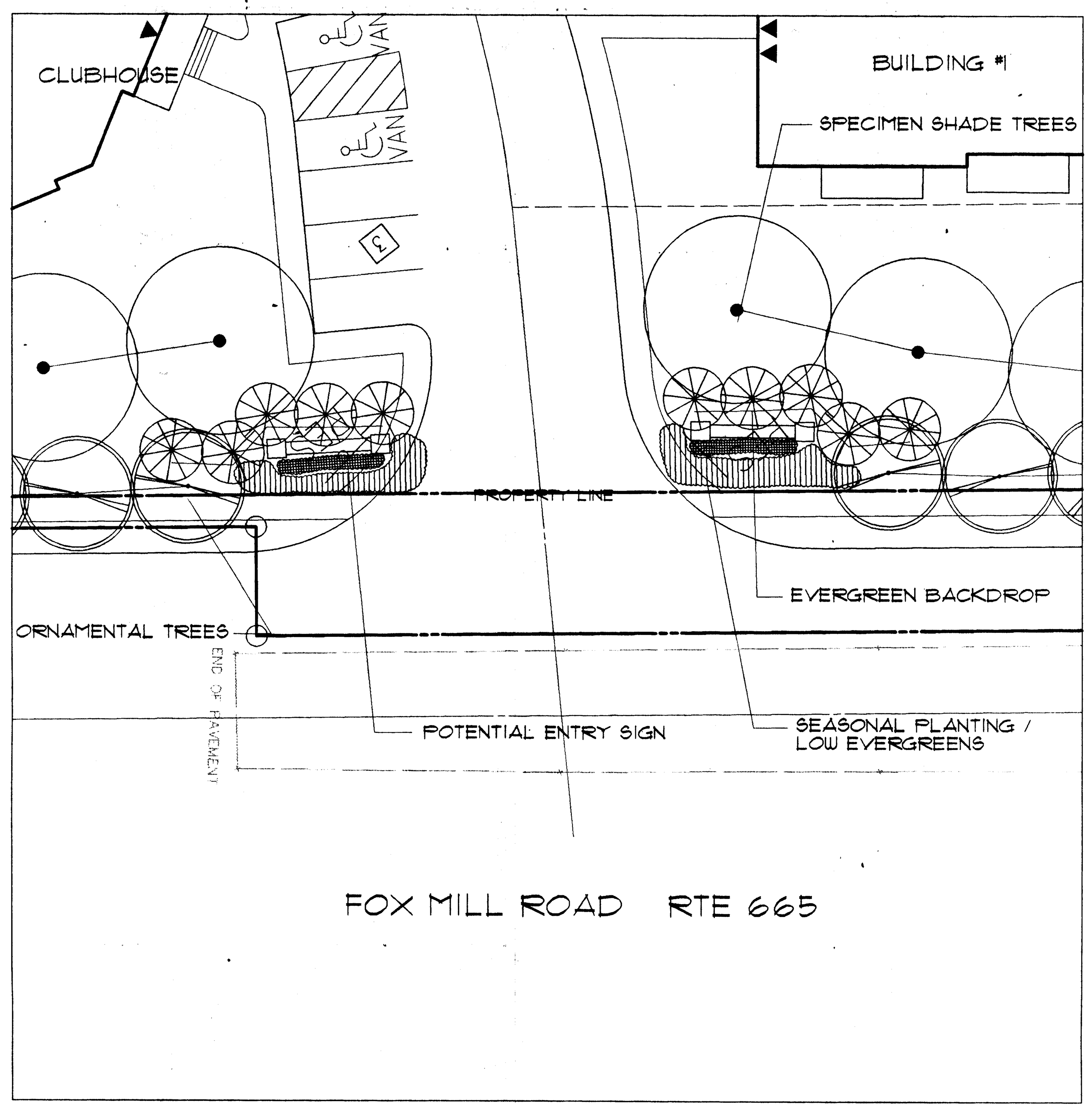

TYPICAL ENTRANCE FEATURE / LANDSCAPE CONCEPT

SCALE = 1 : 200

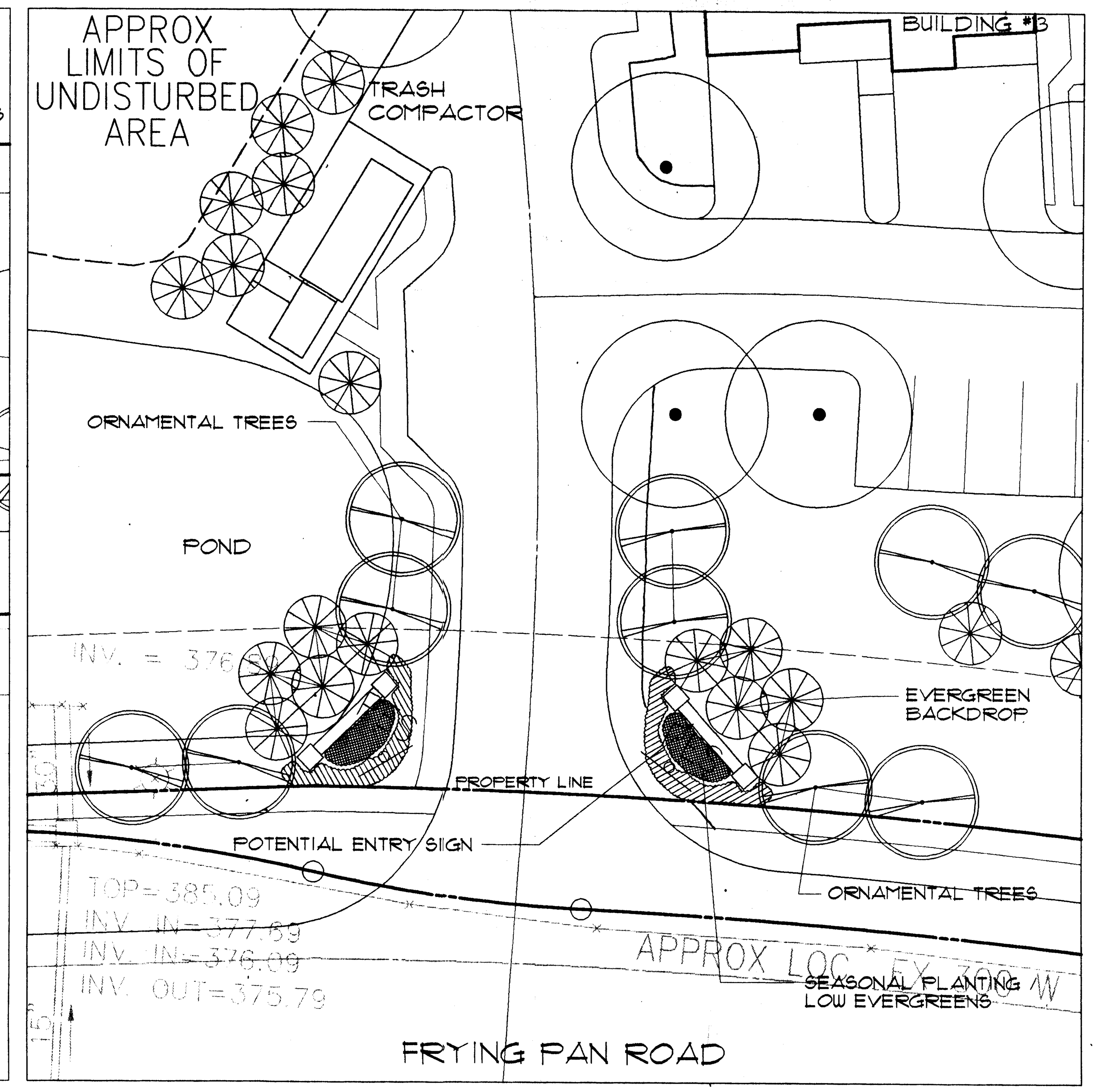

TYPICAL ENTRANCE FEATURE / LANDSCAPE CONCEPT

SCALE = 1 : 200

NOTE:
THE ILLUSTRATIONS/DETAILS SHOWN ON THIS SHEET ARE INTENDED TO CONVEY PROJECT DESIGN CHARACTER AND OVERALL COMMUNITY DESIGN CONCEPT. SITE FEATURES ARE ILLUSTRATIVE, AND REPRESENT THE GENERAL CHARACTER OF PROPOSED DEVELOPMENT. SPECIFIC FEATURES ARE SUBJECT TO FINAL ARCHITECTURAL DESIGN AND ENGINEERING.

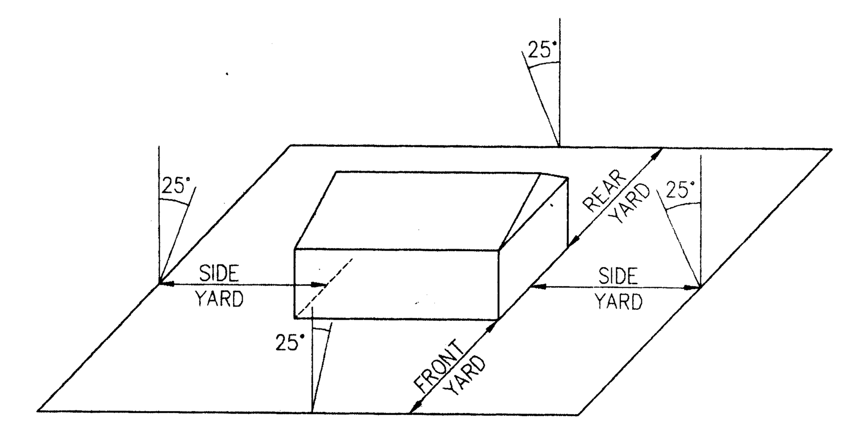

MINIMUM REQUIRED YARD
FOR BLDG AT PERIMETER

TYPICAL BUILDING ELEVATION

COMMONWEALTH OF VIRGINIA
JOHN F. AMATETTI
No. 11447
12/17/97
PROFESSIONAL ENGINEER

Application No FDPA 93-H-032 Staff [signature]
APPROVED DEVELOPMENT PLAN
(DP) (GDP) (CDP) (FDP)
SEE PROFFERS DATED dws. cond. 5/27/98
Date of (BOS) (PC) approval 5/27/98
Sheet 3 of 3

NO.	DESCRIPTION	REVIEW BY	APPROVED	DATE

REVISION APPROVED BY:
DIVISION OF DESIGN REVIEW

VIKA

ENGINEERS ■ PLANNERS ■ LANDSCAPE ARCHITECTS ■ SURVEYORS ■ CONSTRUCTION INSPECTORS

VIKA INCORPORATED
8180 GREENSBORO DRIVE SUITE 200 ■ McLEAN, VIRGINIA 22102
(703)442-7800 ■ FAX (703)761-2787
McLEAN, VA FREDERICK, MD

DAVIS/FRYING PAN ROAD

HUNTER MILL DISTRICT
FAIRFAX COUNTY, VIRGINIA

NOTES, TABULATIONS, ELEVATION AND EXHIBITS

VIKA REVISIONS
3-25-98 △1

DATE: DEC 12, 1997
DES. SFT
DWN. CADD
SCALE: AS SHOWN
PROJECT/FILE NO. 6094
SHEET NO. 3 OF 3

DWG: 6094100A
DATE: 12-17-97