INOVA FAIR OAKS HOSPITAL CAMPUS

Sully District Fairfax County, Virginia

Generalized Development Plan Amendmnet
PCA 2000-SU-032-2
Special Exception Amendment Plat
SEA 84-C-076-8

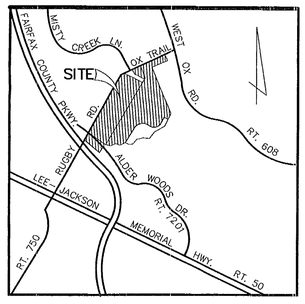

VICINITY MAP
SCALE : 1"= 2,000'

APPLICANT:
INOVA HEALTH CARE SERVICES
3600 JOSEPH SIEWICK DRIVE
FAIRFAX, VA 22033

SEA 84-C-076-8 Application No. Staff UP
APPROVED SE / SP PLAN
SEE DEV CONDS DATED 4-28-06
Date of (BOS) (BZA) approval 5-1-06
Sheet 1 of 8

SHEET INDEX:

1. COVER SHEET
2. GENERALIZED DEVELOPMENT PLAN AMENDMENT / SPECIAL EXCEPTION AMENDMENT PLAT
3. NOTES AND TABULATION
4. DETAILS
5. WATERSHED / SWM FACILITY DATA
6. BMP COMPUTATIONS
7. AS-BUILT WET POND
8. DRAINAGE OUTFALL PLAN AND CROSS-SECTIONS

INOVA FAIR OAKS
HOSPITAL CAMPUS

GENERALIZED DEVELOPMENT PLAN AMENDMENT/
SPECIAL EXCEPTION AMENDMENT PLAT

PCA 2000-SU-032-2
SEA 84-C-076-8

Dewberry

Dewberry & Davis LLC
8401 ARLINGTON BLVD.
FAIRFAX, VA 22031
PHONE: 703.849.0100
FAX: 703.849.0519
www.dewberry.com

SEAL

COMMONWEALTH OF VIRGINIA
Timothy C. Culleiton
TIMOTHY CHARLES CULLEITON
No. 0402 020112
1/13/06
PROFESSIONAL ENGINEER

RECEIVED
Department of Planning & Zoning
JAN 17 2006
Zoning Evaluation Division

REV. JANUARY 12, 2006
REV. NOVEMBER 16, 2005
REV. NOVEMBER 9, 2005
REV. OCTOBER 18, 2005
JULY 22, 2005

M-10560

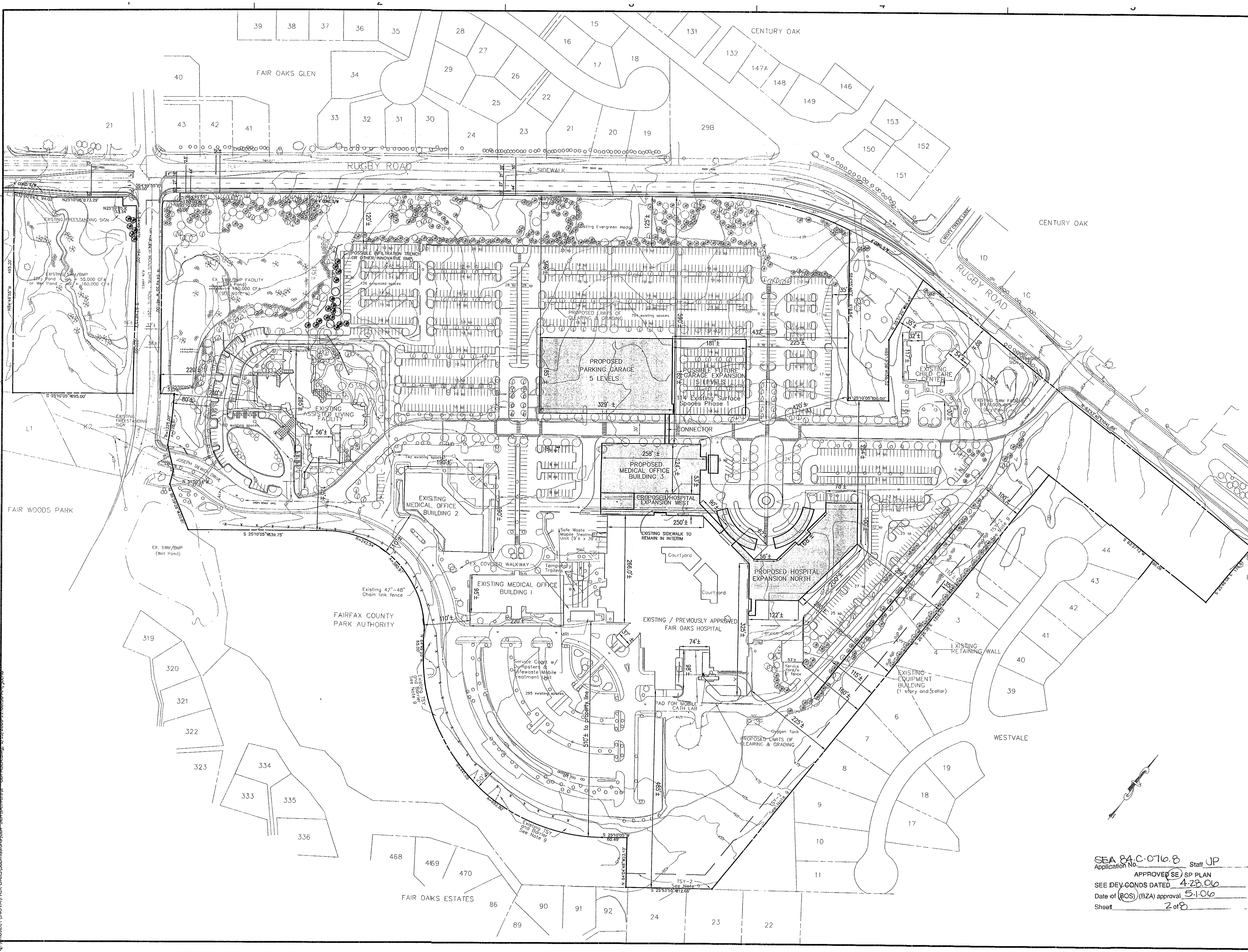

SEA 84-C-076.8
Application No. ______ Staff JP
APPROVED (SE) SP PLAN
SEE DEV CONDS DATED 4-28-06
Date of (BOS) (BZA) approval 5-1-06
Sheet 2 of 8

Dewberry

Dewberry & Davis LLC
8401 ARLINGTON BLVD.
FAIRFAX, VA 22031
PHONE: 703.849.0100
FAX: 703.849.0519
www.dewberry.com

INOVA FAIR OAKS HOSPITAL CAMPUS
GENERALIZED DEVELOPMENT PLAN AMENDMENT
SPECIAL EXCEPTION AMENDMENT PLAT

SULLY DISTRICT
FAIRFAX COUNTY, VIRGINIA

SEAL
COMMONWEALTH OF VIRGINIA
TIMOTHY CHARLES CULLEITON
No. 0402 020112
1/13/06
PROFESSIONAL ENGINEER

KEY PLAN

SCALE
0' 100' 200'

No.	DATE	BY	Description
4	01.12.06	JMC	
3	11.16.05	JMC	
2	11.09.05	JMC	
1	10.18.05	JMC	

REVISIONS

DRAWN BY JTB
APPROVED BY
CHECKED BY PGY
DATE July 22, 2005

TITLE
INOVA FAIR OAKS HOSPITAL CAMPUS GDPA / SEA
PCA 2000-SU-032-2
SEA 84-C-076-8

PROJECT NO.

2

SHEET NO. 2 OF 8

M-10560

NOTES:

1. THE PROPERTY THAT IS THE SUBJECT OF THIS GENERALIZED DEVELOPMENT PLAN AMENDMENT (GDPA) AND SPECIAL EXCEPTION AMENDMENT (SEA) PLAT IS IDENTIFIED ON THE FAIRFAX COUNTY ZONING MAP AS 45-2 ((1)) 41B AND 41-L; AND 45-2 ((2)) 38, 39A, 39B, AND 46A. THE PROPERTY IS ZONED C-3 AND IS THE SITE OF THE FAIR OAKS HOSPITAL CAMPUS. IT CONTAINS 61.82 ACRES.

2. THE GDPA ACCOMPANIES A PROFFERED CONDITION AMENDMENT (PCA) APPLICATION THAT HAS BEEN FILED TO AMEND SEVERAL OF THE PROFFERS AND THE RELATED GENERALIZED DEVELOPMENT PLAN THAT WAS APPROVED WITH THE APPROVAL OF PCA 2000-SU-032 ON DECEMBER 9, 2002.

3. THE PURPOSE OF THE SPECIAL EXCEPTION AMENDMENT IS TO REVISE THE CURRENTLY APPROVED DEVELOPMENT PROGRAM ON THE FAIR OAKS HOSPITAL CAMPUS.

   THERE IS NO CHANGE PROPOSED TO THE CHILD CARE CENTER THAT WAS APPROVED WITH SE 92-Y-024 AND THERE IS NO CHANGE PROPOSED TO THE ASSISTED LIVING FACILITY OR THE TWO EXISTING MEDICAL OFFICE BUILDINGS THAT WERE APPROVED AND THE SUBJECT OF SEA 84-C-076-5.

   THE AMENDMENT PROPOSES THE FOLLOWING REVISIONS TO THE CURRENTLY APPROVED DEVELOPMENT PROGRAM:

   - THE RELOCATION OF THE PREVIOUSLY APPROVED, NOT-YET-CONSTRUCTED, MEDICAL OFFICE BUILDING (MOB-3) TO THE WESTERN SIDE OF THE HOSPITAL. THE PROPOSED BUILDING WILL BE FOUR (4) STORIES AND A MAXIMUM OF 60 ± FEET IN HEIGHT. THE MAXIMUM GROSS FLOOR AREA IN THE MOB-3 WILL BE APPROXIMATELY 116,000± SQUARE FEET.
   - A FOUR (4) STORY ADDITION TO THE HOSPITAL TO ACCOMMODATE FUTURE HOSPITAL EXPANSION. THE PROPOSED ADDITION WILL BE LOCATED ON THE NORTHERN SIDE OF THE EXISTING HOSPITAL IN THE GENERAL VICINITY WHERE THE MOB-3 IS CURRENTLY APPROVED. THE HOSPITAL ADDITION WILL HAVE A MAXIMUM BUILDING HEIGHT OF APPROXIMATELY 60 FEET. THE ADDITION WILL CONTAIN APPROXIMATELY 160,000 SQUARE FEET OF GROSS FLOOR AREA.
   - A TWO STORY ADDITION TO THE WESTERN SIDE OF THE HOSPITAL BUILDING TO ACCOMMODATE THE EXPANSION OF THE RECENTLY COMPLETED KITCHEN AND DINING AREAS AND MATERIALS MANAGEMENT AREA. THIS ADDITION WILL HAVE A MAXIMUM BUILDING HEIGHT OF APPROXIMATELY 32 FEET. THE ADDITION WILL CONTAIN APPROXIMATELY 22,000 SQUARE FEET OF GROSS FLOOR AREA.
   - A MINOR SHIFT TO THE NORTH FOR THE LOCATION OF THE PREVIOUSLY APPROVED FIVE (5) LEVEL PARKING GARAGE. THE FIRST PHASE PARKING GARAGE WILL ACCOMMODATE APPROXIMATELY 980 PARKING SPACES. A POSSIBLE FUTURE EXPANSION OF THE PARKING GARAGE WILL ACCOMMODATE A TOTAL OF APPROXIMATELY 1,430 PARKING SPACES (+450± SPACES).
   - THE CONTINUED USE OF THE FOUR (4) TEMPORARY TRAILERS THAT ARE LOCATED ON THE SOUTH SIDE OF THE EXISTING HOSPITAL BUILDING AND ADJACENT TO MOB-1. THE TRAILERS ARE CURRENTLY USED FOR HOSPITAL ADMINISTRATIVE FUNCTIONS AND THEIR CONTINUED USE IS REQUESTED FOR AN ADDITIONAL FIVE (5) YEARS UNTIL SPACE CAN BE MADE AVAILABLE FOR THE ADMINISTRATIVE SERVICES IN THE MAIN HOSPITAL BUILDING.

4. THE BOUNDARY INFORMATION SHOWN HEREON HAS BEEN PREPARED BY DEWBERRY & DAVIS. IT IS FROM A FIELD SURVEY.

5. THE TOPOGRAPHY SHOWN HEREON IS AT A CONTOUR INTERVAL OF TWO (2) FEET FROM A RECENT AERIAL AND FIELD SURVEY.

6. THE EXISTING BUILDING DIMENSIONS AND LOCATIONS, AND PARKING LOT LAYOUT AND INTERNAL CIRCULATION INFORMATION ARE TAKEN FROM A RECENT AERIAL SURVEY. THE ORIGINAL HOSPITAL AND TWO EXISTING MEDICAL OFFICE BUILDINGS WERE CONSTRUCTED BETWEEN THE YEARS 1986 AND 1994. THE HOSPITAL EXPANSION WAS COMPLETED IN 2003. THE CHILD CARE CENTER WAS CONSTRUCTED IN 1994. THE ASSISTED LIVING FACILITY WAS CONSTRUCTION IN 2000. THESE EXISTING BUILDINGS WILL REMAIN.

7. THE EXISTING AND PROPOSED DEVELOPMENT PROGRAM WILL BE SERVED BY PUBLIC WATER AND SEWER THAT IS CURRENTLY LOCATED ON SITE.

8. THE MINIMUM YARD REQUIREMENTS SET FORTH IN THE ZONING ORDINANCE FOR THE C-3 DISTRICT ARE AS FOLLOWS:

FRONT YARD:	CONTROLLED BY A 25° ANGLE OF BULK PLANE, BUT NOT LESS THAN 40 FEET
SIDE YARD:	NO REQUIREMENT
REAR YARD:	CONTROLLED BY A 20° ANGLE OF BULK PLANE, BUT NOT LESS THAN 25 FEET

9. LANDSCAPING AND SCREENING HAVE BEEN PROVIDED IN ACCORDANCE WITH PREVIOUSLY APPROVED DEVELOPMENT CONDITIONS AND URBAN FOREST MANAGEMENT APPROVALS ON THE EXISTING DEVELOPED PORTION OF THE SUBJECT PROPERTY. LANDSCAPING AND SCREENING WILL BE PROVIDED IN ACCORDANCE WITH THE REPRESENTATIONS ON THE ATTACHED GRAPHIC ON THAT PORTION OF THE SUBJECT PROPERTY WHERE NEW DEVELOPMENT IS PROPOSED.

   THE EXISTING VEGETATION IN THE AREA ALONG THE EASTERN EDGE OF THE SUBJECT PROPERTY WHERE IT ABUTS THE WESTVALE COMMUNITY HAS BEEN PRESERVED, AND SUPPLEMENTAL LANDSCAPING HAS BEEN PROVIDED WITHIN THE AREA TO FURTHER SCREEN THE DEVELOPMENT PROGRAM ON THE CAMPUS IN ACCORDANCE WITH A PLAN THAT WAS COORDINATED WITH THE WESTVALE COMMUNITY. AT THE REQUEST OF THE WESTVALE COMMUNITY, NO BARRIER HAS BEEN PROVIDED ALONG THE EASTERN EDGE OF THE PROPERTY. GIVEN THIS BACKGROUND, A REAFFIRMATION OF THE WAIVER OF THE BARRIER REQUIREMENT AND THE MODIFICATION OF THE TRANSITIONAL SCREENING YARD PLANTING REQUIREMENT IS HEREBY REQUESTED IN FAVOR OF THE LANDSCAPING PRESENTED ON THE GRAPHIC AND DISCUSSED ABOVE.

   GIVEN THE 115-120 FOOT BUFFER THAT IS PROPOSED ALONG RUGBY ROAD AND THE PROPOSED EXTENSIVE OPEN SPACE AREA SOUTH OF ALDER WOODS DRIVE, NO TRANSITIONAL SCREENING OR BARRIER IS PROPOSED ALONG THE SOUTHERN OR WESTERN BOUNDARIES OF THE SUBJECT PROPERTY. ADDITIONAL PLANTINGS ALONG RUGBY ROAD HAVE BEEN PROVIDED IN ACCORDANCE WITH THE LANDSCAPING REPRESENTED ON THE GRAPHIC. GIVEN THIS BACKGROUND, A REAFFIRMATION IS HEREBY REQUESTED FOR A BOARD MODIFICATION OF THE TRANSITIONAL SCREENING AND A WAIVER OF THE BARRIER REQUIREMENT IN CONJUNCTION WITH ITS APPROVAL OF THIS GDPA/SEA.

   IN ADDITION TO THE LANDSCAPE REPRESENTATIONS ON THE GRAPHIC, A WETLAND SEED MIX HAS BEEN PROVIDED IN THE STORMWATER MANAGEMENT AND BEST MANAGEMENT PRACTICE DRY POND LOCATED IN THE NORTHEAST QUADRANT OF THE RUGBY ROAD/ALDER WOODS DRIVE INTERSECTION.

   LASTLY, TRANSITIONAL SCREENING AND A BARRIER HAVE BEEN PREVIOUSLY PROVIDED AND WILL BE MAINTAINED ALONG THE SOUTHEASTERN BOUNDARY OF THE SUBJECT PROPERTY ADJACENT TO PARCEL 42.

10. PARKING AND LOADING SPACES WILL BE PROVIDED FOR THE MIXTURE OF USES ON THE CAMPUS IN ACCORDANCE WITH THE PROVISIONS OF ARTICLE 11 OF THE ZONING ORDINANCE AND THE REPRESENTATIONS IN THE TABULATION AND ON THE GRAPHIC.

    THE APPLICANT RESERVES THE RIGHT TO REQUEST A REDUCTION IN THE TOTAL NUMBER OF REQUIRED PARKING SPACES IN ACCORDANCE WITH THE PROVISIONS SET FORTH IN PAR. 4 OF SECT. 11-102 OF THE ZONING ORDINANCE. IN ADDITION, THE APPLICANT RESERVES THE RIGHT TO CONSTRUCT OR NOT CONSTRUCT ALL OF THE PARKING SPACES IN THE LAST PARKING BAY ADJACENT TO RUGBY ROAD.

    LASTLY, THE APPLICANT RESERVES THE RIGHT TO REDUCE THE TOTAL NUMBER OF PARKING AND LOADING SPACES ON THE CAMPUS WITHOUT A GDPA/SEA OR ADMINISTRATIVE INTERPRETATION TO ALLOW FOR MINOR ENGINEERING ISSUES SUCH AS, BUT NOT LIMITED TO, RESTRIPING PARKING LOTS, STORAGE, CONSTRUCTION EQUIPMENT/TRAILERS AND STAGING AREAS, STORMWATER MANAGEMENT PONDS, ETC. IN NO EVENT, HOWEVER, WILL THE TOTAL NUMBER OF PARKING SPACES ON THE ENTIRE CAMPUS SITE BE REDUCED TO LESS THAN THAT NUMBER THAT IS REQUIRED FOR THE EXISTING USES ON THE CAMPUS AT THAT POINT IN TIME. FURTHERMORE, IT IS UNDERSTOOD THAT THE NUMBER OF PARKING SPACES MAY BE REDUCED TO ACCOMMODATE FUTURE EXPANSION/ADDITIONS TO THE USES ON CAMPUS, AS MAY BE APPROVED WITH FUTURE GDPA OR SEA APPLICATIONS, AS LONG AS IT CAN BE DEMONSTRATED THAT ADEQUATE PARKING IS PROVIDED.

11. TO THE BEST OF OUR KNOWLEDGE, THERE ARE NO GRAVES LOCATED ON THE SUBJECT PROPERTY.

12. THE EXISTING AND PROPOSED HOSPITAL AND RELATED USES ON SITE DO UTILIZE, STORE, TREAT AND DISPOSE OF HAZARDOUS AND TOXIC SUBSTANCES AS SET FORTH IN TITLE 40, CODE OF FEDERAL REGULATIONS PARTS 116.4, 302.4 AND 355; HAZARDOUS WASTE AS SET FORTH IN COMMONWEALTH OF VIRGINIA/DEPARTMENT OF WASTE MANAGEMENT VR 672-10-10 - VIRGINIA HAZARDOUS WASTE MANAGEMENT REGULATIONS; AND/OR PETROLEUM PRODUCTS AS DEFINED IN TITLE 40, CODE OF FEDERAL REGULATIONS PART 280. TO THE BEST OF OUR KNOWLEDGE AND UNDERSTANDING, ALL SUCH SUBSTANCES THAT ARE UTILIZED, STORED AND/OR DISPOSED OF IN CONJUNCTION WITH THE HOSPITAL AND RELATED USES WILL BE IN ACCORDANCE WITH SAID REGULATIONS.

13. THERE IS NO FLOODPLAIN DESIGNATED BY THE FEDERAL INSURANCE ADMINISTRATION, UNITED STATES GEOLOGICAL SURVEY OR FAIRFAX COUNTY, NO ENVIRONMENTAL QUALITY CORRIDOR (EQC) OR NO RESOURCE PROTECTION AREA (RPA) LOCATED ON THE SUBJECT PROPERTY.

14. TO THE BEST OF OUR KNOWLEDGE, THERE ARE NO EXISTING UTILITY EASEMENTS HAVING A WIDTH OF TWENTY-FIVE (25) FEET OR MORE, NOR ARE THERE ANY EXISTING OR MAJOR UNDERGROUND UTILITIES LOCATED ON THE SUBJECT PROPERTY. THERE ARE SEVERAL EXISTING STORM DRAINAGE EASEMENTS GREATER THAN TWENTY-FIVE (25) FEET IN WIDTH LOCATED ON LOTS 38, 39B, 40A AND 40B.

15. A STATEMENT CONFIRMING THE OWNERSHIP OF THE PROPERTY AND THE APPLICANT'S INTEREST IS PROVIDED SEPARATELY.

16. THE COMPREHENSIVE PLAN RECOMMENDS THAT A BICYCLE TRAIL BE LOCATED ON THE NORTHERN (OR EASTERN) SIDE OF WEST OX ROAD AND ALONG THE NORTHERN (OR EASTERN) SIDE OF THE FAIRFAX COUNTY PARKWAY. IN ADDITION, A PEDESTRIAN TRAIL IS RECOMMENDED ALONG THE WESTERN SIDE OF RUGBY ROAD.

17. STORMWATER MANAGEMENT (SWM) AND BEST MANAGEMENT PRACTICES (BMPs) HAVE BEEN PROVIDED ON SITE IN ACCORDANCE WITH THE APPLICABLE PROVISIONS SET FORTH IN THE PUBLIC FACILITIES MANUAL, CHAPTER 118 OF THE CODE OF THE COUNTY OF FAIRFAX, THE CHESAPEAKE BAY PRESERVATION ORDINANCE AND ALSO IN ACCORDANCE WITH THE DEVELOPMENT CONDITIONS APPROVED WITH THE APPROVAL OF SEA 84-C-076-7 AND SE 92-Y-024. THE EXISTING SWM AND BMP FACILITIES ARE REPRESENTED ON SHEETS 4-7.

    PRELIMINARY ENGINEERING SUGGESTS THE EXISTING FACILITIES ARE ADEQUATE TO ACCOMMODATE THE PROPOSED DEVELOPMENT PROGRAM. SITE OUTFALL IS ALSO DEEMED TO BE ADEQUATE TO RUGBY ROAD.

18. IN ACCORDANCE WITH PRIOR ZONING APPROVALS AND IN ACCORDANCE WITH THE RECOMMENDATION SET FORTH IN THE COMPREHENSIVE PLAN, THE FLOOR AREA RATIO (FAR) PRESENTED IN THE TABULATION IS BASED ON THE ORIGINAL LAND AREA(S) PRIOR TO DEDICATIONS:

46.3296 AC	ORIGINAL LAND AREA OF HOSPITAL CAMPUS
1.4357 AC	ORIGINAL LAND AREA OF CHILD CARE CENTER SITE
24.3600 AC	ORIGINAL LAND AREA ADDED TO THE CAMPUS BY RZ 1998-SU-067 LESS THE CHILD CARE CENTER SITE
72.1253 AC	TOTAL FOR PURPOSE OF FAR CALCULATION

    IT IS TO BE UNDERSTOOD THAT THE FLOOR AREA RATIO RELATED TO ALL PRIOR DEDICATIONS AND ALL FUTURE DEDICATIONS IS RESERVED FOR THE DEVELOPMENT OF THE SUBJECT PROPERTY IN ACCORDANCE WITH THE PROVISIONS SET FORTH IN PAR. 4 OF SECT. 2-308 OF THE ZONING ORDINANCE. ULTIMATE DEVELOPMENT OF THE SUBJECT PROPERTY WILL NOT EXCEED A TOTAL FLOOR AREA RATIO OF 0.30 BASED ON THE ORIGINAL COMBINED TOTAL LAND AREA(S) OF 72.1253 ACRES.

19. THE DEVELOPMENT OF THE PROPOSED IMPROVEMENTS WILL OCCUR IN PHASES. THE FIRST PHASE OF THE CONSTRUCTION, THE PROPOSED MOB-3 BUILDING AND PARKING GARAGE, IS CURRENTLY PLANNED TO COMMENCE AS SOON AS APPLICABLE PLANS AND PERMITS ARE APPROVED. IT IS ANTICIPATED THAT THE PROPOSED ADDITIONS TO THE HOSPITAL BUILDING WILL BE CONSTRUCTED AS A SECOND AND POSSIBLY THIRD PHASE. AS A CONSEQUENCE, IT IS TO BE UNDERSTOOD THAT CONSTRUCTION OF BOTH OR ALL PHASES OF DEVELOPMENT MAY NOT COMMENCE WITHIN THE THIRTY (30) MONTHS FROM THE DATE OF APPROVAL OF THE SEA AS PRESCRIBED BY THE PROVISION SET FORTH IN SECT. 9-015 OF THE ZONING ORDINANCE.

    IT IS TO BE FURTHER UNDERSTOOD THAT AS PART OF THE PHASING OF DEVELOPMENT, INTERIM PARKING AREAS MAY BE REQUIRED AND THEY MAY NOT BE LOCATED IN STRICT ACCORDANCE WITH THE FINAL DEVELOPMENT PROGRAM REPRESENTED ON THE GRAPHIC.

20. THE FLOOR AREAS REPRESENTED IN THE TABULATION ARE GROSS FLOOR AREAS AS DEFINED IN THE ZONING ORDINANCE. IT IS UNDERSTOOD THAT THE PROPOSED BUILDINGS OR PORTIONS THEREOF MAY HAVE CELLAR SPACE(S) WHICH SPACE(S) WILL BE CALCULATED FOR OFF-STREET PARKING REQUIREMENTS IN ACCORDANCE WITH THE PROVISION SET FORTH IN PAR. 25 OF SECT. 11-102 OF THE ZONING ORDINANCE.

21. THE EXACT LOCATIONS, SHAPES AND SIZES OF THE BUILDING FOOTPRINTS, AND PARKING STRUCTURE SHOWN ON THE GRAPHIC ARE PRELIMINARY AND SCHEMATIC AND ARE NOT TO BE CONSIDERED FINAL. THEY ARE SUBJECT TO ADJUSTMENT AND REFINEMENT WITH FINAL ENGINEERING AND ARCHITECTURAL DESIGN SO LONG AS THEY REMAIN IN SUBSTANTIAL CONFORMANCE WITH THE REPRESENTATIONS ON THE GRAPHIC. THE TOTAL GROSS FLOOR AREA AND THE BUILDING HEIGHTS PRESENTED IN THE TABULATION ARE TO BE CONSIDERED MAXIMUMS. THE OPEN SPACE AS REPRESENTED IN THE TABULATION AND THE DIMENSIONS TO THE PERIPHERAL LOT LINES AS REPRESENTED ON THE GRAPH ARE TO BE CONSIDERED MINIMUMS WITH THE UNDERSTANDING THAT ALL DIMENSIONS SHOWN ON THE GRAPHIC ARE SUBJECT TO MINOR MODIFICATION IN ACCORDANCE WITH THE PROVISIONS SET FORTH IN PAR. 4 OF SECT. 9-004 OF THE ZONING ORDINANCE.

    THE APPLICANT RESERVES THE RIGHT TO DEVELOP A LESSER AMOUNT OF GROSS FLOOR AREA THAN THE TOTAL REPRESENTED IN THE TABULATION AND THE BUILDING FOOTPRINTS AND ASSOCIATED PARKING LOT LAYOUTS MAY BE REDUCED/MODIFIED ACCORDINGLY. THE APPLICANT RESERVES THE FURTHER RIGHT TO PROVIDE ADDITIONAL PARKING SPACES WHERE THE BUILDING FOOTPRINT(S) ARE REDUCED, SHIFTED OR MODIFIED SO LONG AS THE PARKING SPACES DO NOT REDUCE THE AMOUNT OF OPEN SPACE REPRESENTED IN THE TABULATION.

    LASTLY, THE APPLICANT RESERVES THE RIGHT TO SHIFT GROSS FLOOR AREA THAT IS REPRESENTED ON THE TABULATION FROM ONE BUILDING OR ADDITION TO ANOTHER WITH THE UNDERSTANDING THAT THE RESULTANT BUILDING FOOTPRINTS WILL BE IN SUBSTANTIAL CONFORMANCE WITH THE FOOTPRINTS REPRESENTED ON THE GRAPHIC AND THE MAXIMUM TOTAL GROSS FLOOR AREA REPRESENTED IN THE TABULATION WILL NOT BE EXCEEDED.

22. IT IS UNDERSTOOD THAT ADDITIONAL SITE FEATURES SUCH AS GAZEBOS, FLAGPOLES, TRELLISES, SIGNS, SIDEWALKS/TRAILS, PASSIVE AND ACTIVE RECREATION FACILITIES, WALLS, FENCES, LIGHT STANDARDS AND/OR UTILITY AND MAINTENANCE STRUCTURES NOT REPRESENTED ON THE GRAPHIC MAY BE PROVIDED.

    ALL SIGNS WILL BE PROVIDED IN ACCORDANCE WITH THE PROVISIONS SET FORTH IN ARTICLE 12 OF THE ZONING ORDINANCE AND IN ACCORDANCE WITH PAST APPROVALS. ALL PROPOSED LIGHT STANDARDS WILL BE SIMILAR IN SIZE AND HEIGHT TO THE EXISTING LIGHT STANDARDS ON THE CAMPUS AND WILL BE SHIELDED AND LOCATED IN SUCH A MANNER AS TO REDUCE GLARE ON ADJACENT PROPERTIES IN ACCORDANCE WITH THE STANDARDS SET FORTH IN ARTICLE 14 OF THE ZONING ORDINANCE. IT IS ALSO UNDERSTOOD THAT MOBILE AND LAND BASED TELECOMMUNICATION FACILITIES MAY BE PROVIDED ON SITE IN ACCORDANCE WITH THE PROVISIONS SET FORTH IN SECT. 2-514 OF THE ZONING ORDINANCE AND IN ACCORDANCE WITH THE RECOMMENDATIONS SET FORTH IN THE COMPREHENSIVE PLAN.

23. TO THE BEST OF OUR KNOWLEDGE, THE PROPOSED DEVELOPMENT OF THE SUBJECT PROPERTY CONFORMS TO ALL CURRENT APPLICABLE LAND DEVELOPMENT ORDINANCES, REGULATIONS AND ADOPTED STANDARDS EXCEPT AS QUALIFIED ABOVE.

TABULATION:

EXISTING ZONING		C-3
LAND AREA		61.82 AC*
GROSS FLOOR AREA PERMITTED (72.1253 AC @ 0.30 FAR - PER COMPREHENSIVE PLAN)		942,533 SF*
EXISTING GROSS FLOOR AREA		602,923± SF
HOSPITAL	367,244 SF	
MEDICAL OFFICE BUILDING 1	74,656 SF	
MEDICAL OFFICE BUILDING 2	76,660 SF	
CHILD CARE CENTER	9,380 SF	
ASSISTED LIVING FACILITY	68,454 SF	
MOBILE CATH LAB	640 SF	
EQUIPMENT BUILDING	2,809 SF	
TEMPORARY TRAILERS	3,080 SF	
PREVIOUSLY APPROVED GROSS FLOOR AREA NOT YET CONSTRUCTED (PROPOSED MEDICAL OFFICE BUILDING 3)		90,000 ± SF
PROPOSED ADDITIONAL GROSS FLOOR AREA WITH THIS APPLICATION		208,000± SF
PROPOSED HOSPITAL EXPANSION TO NORTH	160,000± SF	
PROPOSED HOSPITAL EXPANSION TO WEST	22,000± SF	
PROPOSED ADDITIONAL GFA FOR MOB-3 (FOR A TOTAL GFA OF 116,000± SF)	26,000± SF	
TOTAL EXISTING, PREVIOUSLY APPROVED AND PROPOSED GROSS FLOOR AREA (602,923 SF + 90,000 SF + 208,000 SF)		900,923± SF
GROSS FLOOR AREA AVAILABLE FOR EXPANSION(S) TO BE APPROVED IN THE FUTURE (942,533 SF – 900,923 SF)		41,610± SF
FLOOR AREA RATIO (FAR)		
PERMITTED - PER COMPREHENSIVE PLAN		0.30*
PROPOSED WITH THIS APPLICATION		0.29*
OPEN SPACE		
REQUIRED (15% OF 61.82 AC)		9.27± AC
PROPOSED (45%)		27.80± AC
PARKING SPACES REQUIRED		1,479
HOSPITAL: 200 LICENSED BEDS @ 2.9 SPACES/BED	580	
MOB-1: 74,656 SF X 3 SPACES/1,000 SF GFA	224	
MOB-2: 76,660 SF X 3 SPACES/1,000 SF GFA	230	
CHILD CARE CENTER: 150 CHILDREN X 0.16 SPACE/CHILD	24	
ASSISTED LIVING FACILITY	73	
112 RESIDENTS @ 1 SPACE/3 RESIDENTS = 38 SPACES		
35 EMPLOYEES @ 1 SPACE/EMPLOYEE = 35 SPACES		
PROPOSED MOB: 116,000 SF X 3 SPACES/1,000 SF GFA	348	
PARKING SPACES PREVIOUSLY APPROVED		2,886±
PARKING SPACES PROPOSED WITH FIRST PHASE GARAGE		2,755±**
SURFACE	1,775	
GARAGE	980	
PARKING SPACES PROPOSED WITH POSSIBLE SECOND PHASE GARAGE		3,088±**
SURFACE	1,658	
GARAGE	1,430	
BUILDING HEIGHTS EXISTING		
HOSPITAL (6 STORIES)		90± FT
MEDICAL OFFICE BUILDING 1 (4 STORIES)		52± FT
MEDICAL OFFICE BUILDING 2 (4 STORIES)		52± FT***
ASSISTED LIVING FACILITY (3 STORIES)		50± FT***
CHILD CARE CENTER (1 STORY)		20± FT
TEMPORARY TRAILERS		15± FT
BUILDING HEIGHTS PROPOSED		
HOSPITAL EXPANSION NORTH (4 STORIES)		60± FT****
MEDICAL OFFICE BUILDING 3 (4 STORIES)		60± FT****
HOSPITAL EXPANSION WEST (2 STORIES)		32± FT
PARKING GARAGE (5 LEVELS)		55± FT

* SEE NOTE 18.

** SEE NOTE 10.

*** IN ADDITION, MOB-2 HAS A MECHANICAL PENTHOUSE THAT APPROXIMATES 12 FEET IN HEIGHT, AND THE ASSISTED LIVING FACILITY HAS A MANSARD ROOF SCREEN THAT APPROXIMATES 12.6 FEET IN HEIGHT.

**** BOTH THE HOSPITAL EXPANSION NORTH AND THE MEDICAL OFFICE BUILDING-3 MAY HAVE PENTHOUSES/SCREEN WALLS WITH MORE THAN 25% ROOF AREA COVERAGE AND HEIGHTS UP TO 12 FEET.

SEA 84-C-076.8
Application No. ______ Staff JP
APPROVED (SE) / SP PLAN
SEE DEV CONDS DATED 4-28-06
Date of (BOS) (BZA) approval 5-1-06
Sheet 3 of 8

Dewberry

Dewberry & Davis LLC
8401 ARLINGTON BLVD.
FAIRFAX, VA 22031
PHONE: 703.849.0100
FAX: 703.849.0519
www.dewberry.com

INOVA FAIR OAKS HOSPITAL CAMPUS
GENERALIZED DEVELOPMENT PLAN AMENDMENT
SPECIAL EXCEPTION AMENDMENT PLAT
SULLY DISTRICT
FAIRFAX COUNTY, VIRGINIA

SEAL
COMMONWEALTH OF VIRGINIA
TIMOTHY CHARLES CULLETON
No. 0402 020112
1/13/06
PROFESSIONAL ENGINEER

KEY PLAN

SCALE

No.	DATE	BY	Description
4	01.12.06	JMC	
3	11.16.05	JMC	
2	11.09.05	JMC	
1	10.18.05	JMC	

REVISIONS

DRAWN BY JTB
APPROVED BY
CHECKED BY PGY
DATE July 22, 2005

TITLE
INOVA FAIR OAKS HOSPITAL CAMPUS NOTES AND TABULATION

PROJECT NO.

3

SHEET NO. 3 OF 8

M-10560

Q:\PROJECT\INOVA\FAIR OAKS\Submissions\GDP SEA\Delivers\3 - notes n tab.dwg, 1/12/2006 2:03:35 PM, icena

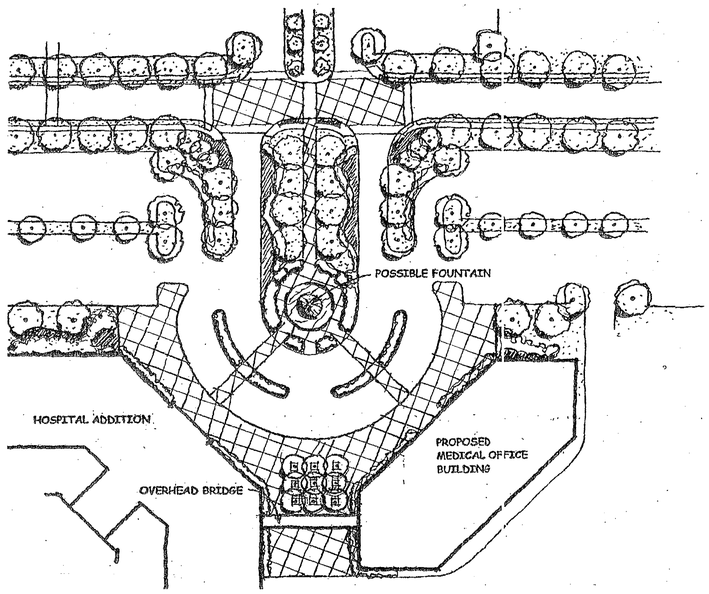

HOSPITAL ADDITION / MEDICAL OFFICE BUILDING COURTYARD

NOT TO SCALE

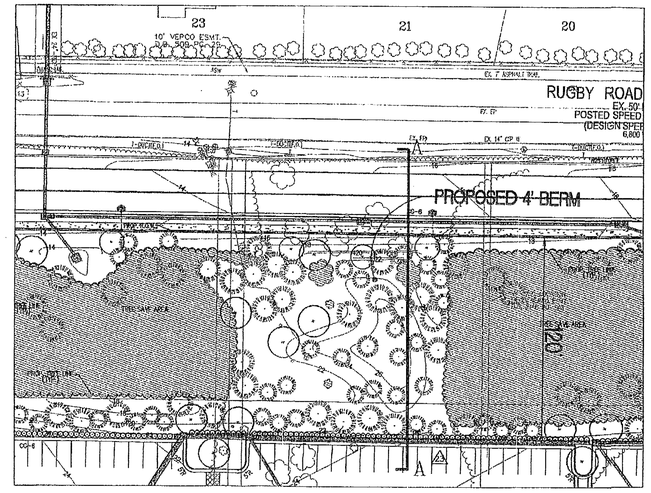

TYPICAL BUFFER / SUPPLEMENTAL PLANTING

NOT TO SCALE

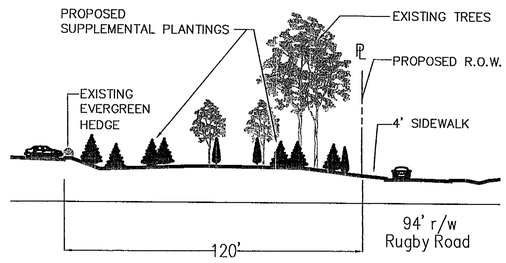

SECTION A-A'

SCALE: 1" = 30'

PROPOSED LIGHT FIXTURE - Assisted Living Facility

NOT TO SCALE

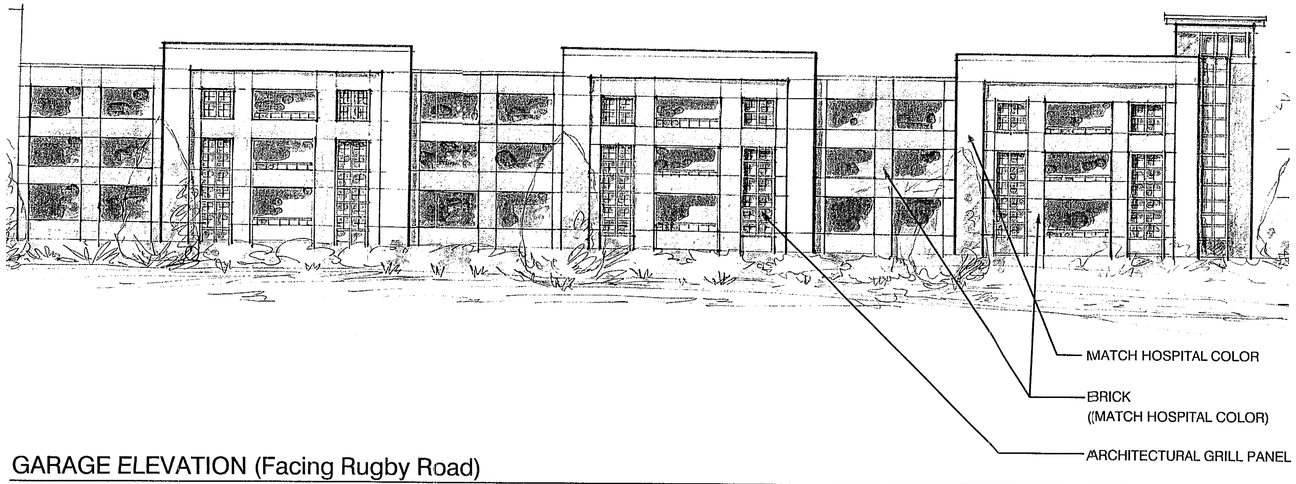

GARAGE ELEVATION (Facing Rugby Road)

NOT TO SCALE

SEA 84-C-076-8 Application No. Staff JP
APPROVED SE SP PLAN
SEE DEV CONDS DATED 4-28-06
Date of (BOS) (BZA) approval 5-1-06
Sheet 4 of 8

Dewberry

Dewberry & Davis LLC
8401 ARLINGTON BLVD.
FAIRFAX, VA 22031
PHONE: 703.849.0100
FAX: 703.849.0519
www.dewberry.com

INOVA FAIR OAKS HOSPITAL CAMPUS
GENERALIZED DEVELOPMENT PLAN AMENDMENT
SPECIAL EXCEPTION AMENDMENT PLAT
SULLY DISTRICT
FAIRFAX COUNTY, VIRGINIA

SEAL
COMMONWEALTH OF VIRGINIA
TIMOTHY CHARLES CULLETON
No. 0402 020112
1/13/06
PROFESSIONAL ENGINEER

KEY PLAN

SCALE

No.	DATE	BY	Description
4	01.12.06	JMC	SHEET ADDED

REVISIONS

DRAWN BY JMC
APPROVED BY
CHECKED BY PGY
DATE

TITLE
INOVA FAIR OAKS HOSPITAL CAMPUS

DETAILS

PROJECT NO.

4

SHEET NO. 4 OF 8

M-10560

Q:\PROJECT\INOVA\FAIR OAKS\Submissions\GDP SEA\Delivers\4 - Details.dwg 1/12/2006 10:20:02 AM jcana

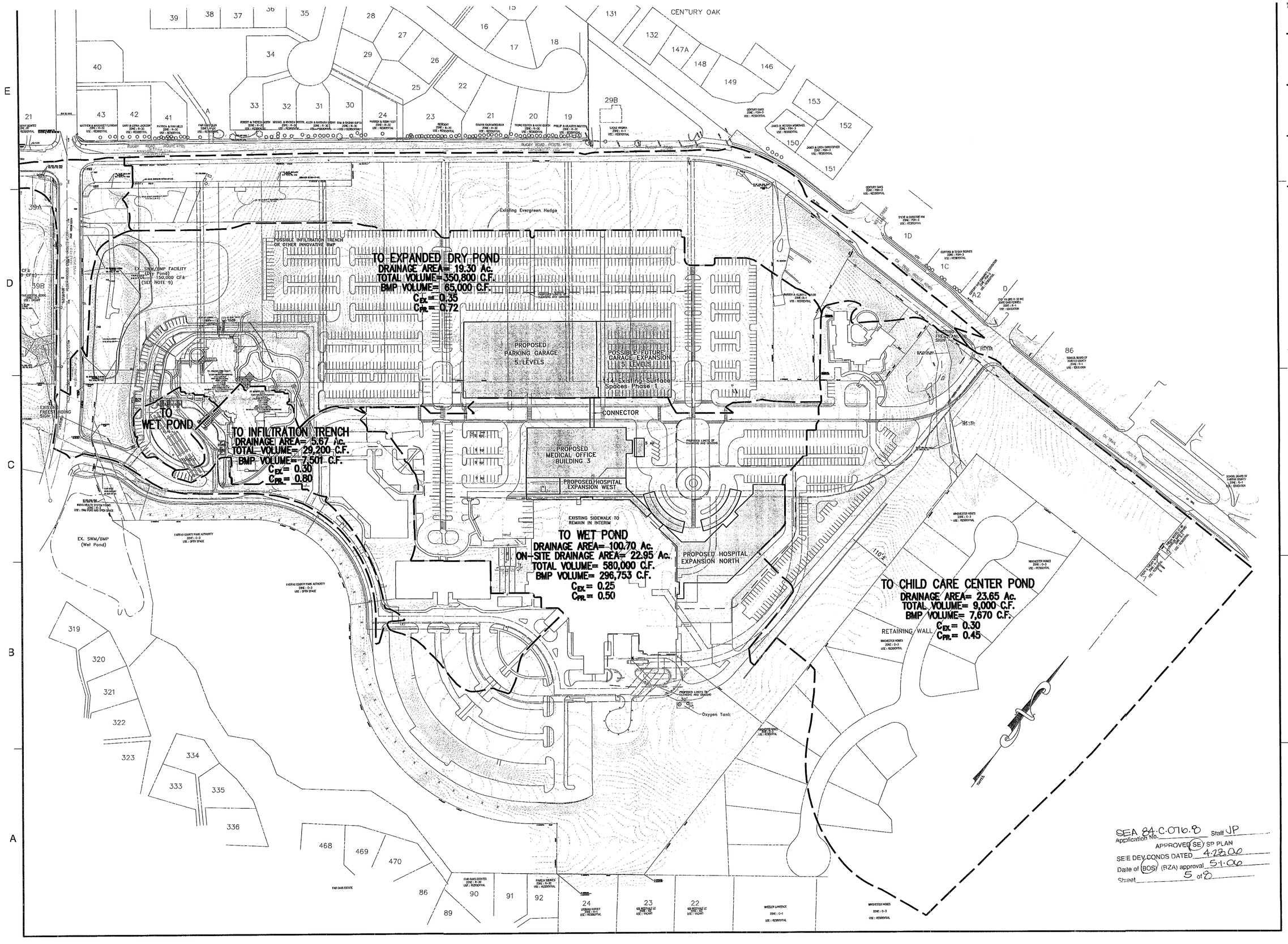

Dewberry

Dewberry & Davis LLC
8401 ARLINGTON BLVD.
FAIRFAX, VA 22031
PHONE: 703.849.0100
FAX: 703.849.0519
www.dewberry.com

INOVA FAIR OAKS HOSPITAL CAMPUS

GENERALIZED DEVELOPMENT PLAN AMENDMENT
SPECIAL EXCEPTION AMENDMENT PLAT

SULLY DISTRICT
FAIRFAX COUNTY, VIRGINIA

SEAL

COMMONWEALTH OF VIRGINIA
TIMOTHY CHARLES CULLETON
No. 0402 020112
1/13/06
PROFESSIONAL ENGINEER

KEY PLAN

SCALE

0' 100' 200'

No.	DATE	BY	Description
4	01.12.06	JMC	
3	11.16.05	JMC	
2	11.09.05	JMC	NEW SHEET

REVISIONS

DRAWN BY JTB
APPROVED BY
CHECKED BY PGY
DATE

TITLE

WATERSHED / SWM FACILITY DATA

PCA 2000-SU-032-2
SEA 84-C-076-8

PROJECT NO.

5

SHEET NO. 5 OF 8

M-10560

BMP Facility Design Calculations

Plan Name: FAIR OAKS HOSPITAL
Plan Number: 3624-SP-07

Date: 11-22-00
Engineer: JFK

I. Water Quality Narrative

THE SITE IS SERVED BY SEVERAL SWM/BMP FACILITIES. THE EASTERN PART OF THE HOSPITAL SITE IS SERVED BY AN EXTENDED DETENTION DRY POND AND A SMALL OPEN SPACE AREA. THE MIDDLE PART OF THE HOSPITAL SITE DRAINS INTO AN EXISTING WET POND LOCATED AT THE INTERSECTION OF ALDER WOODS DRIVE AND JOSEPH SIEWICK DRIVE. THE WESTERN PART OF THE SITE IS SERVED BY INFILTRATION TRENCH, EXTENDED DETENTION DRY POND AND AN OPEN SPACE AREA. THIS POND IS BEING EXPANDED WITH THIS SITE PLAN. THE PARTS OF THE SITE WHICH REMAIN UNDEVELOPED ARE NOT CONSIDERED IN THE BMP COMPUTATIONS BECAUSE BMP IS NOT REQUIRED FOR THESE AREAS. THE TOTAL HOSPITAL SITE AREA IS 63.87 AC. THIS AREA INCLUDES A SMALL PARCEL ON THE WEST SIDE OF ALDER WOODS DRIVE. ALL BMP FACILITIES DISCUSSED ABOVE ARE EXISTING FACILITIES. THE DRY POND AT ALDER WOODS DRIVE IS BEING ENLARGED WITH THIS SITE PLAN. THE VARIOUS EXISTING SWM/BMP FACILITIES LISTED ABOVE WERE CONSTRUCTED WITH VARIOUS SITE PLANS AND ARE FULLY OPERATIONAL. THE ANALYSIS BELOW SHOWS THAT THE HOSPITAL SITE PROVIDES ADEQUATE BMP FOR ALL DEVELOPED AREAS IN EXCESS OF THE REQUIRED 50% EFFICIENCY.

TOTAL HOSPITAL SITE AREA	63.87 AC.
UNDEVELOPED AREAS ON-SITE :	
A-9	5.80 AC.
A-10	3.15 AC.
A-11	4.14 AC.
NET HOSPITAL SITE AREA FOR BMP	50.78 AC.

II. Watershed Information

Part 1: List all of the Subareas and "C" Factors used in the BMP Computations

Subarea Designation and Description (1)	"C" (2)	Acres (3)
A-1 DRY POND - ALDER WOODS DRIVE	0.72	17.87
A-2 WATER QUALITY MANAGEMENT AREA (OPEN SPACE)	0.30	0.40
A-3 INFILTRATION TRENCH	0.77	4.50
A-4 OFFSITE UNCONTROLLED	0.40	15.50
A-5 WET POND	0.50	0.62
A-6 DRY POND - DAY CARE	0.52	4.01
A-7 UNCONTROLLED - DAY CARE	0.40	0.90
A-8 OFFSITE, CONTROLLED FOR CREDIT DRY POND - ALDER WOODS DR.	0.90	0.38
A-9 UNCONTROLLED UNDEVELOPED	0.30	1.80
A-10 UNCONTROLLED UNDEVELOPED	0.30	3.15
A-11 UNCONTROLLED UNDEVELOPED	0.30	4.14
A-13 OPEN SPACE	0.30	0.15
A-14 WET POND	0.55	22.33
A-15 OFFSITE DRY POND - ALDER WOODS DRIVE - CONTROLLED FOR CREDIT	0.64	1.05
A-16 OFFSITE UNCONTROLLED - RUGBY ROAD	0.90	1.80

NOTE: Rational formula "C" factors are taken from the general zoning values listed in Appendix 4-1 or 4-2 depending on the location of the BMP facility (Fairfax County Public Facilities Manual Chart A6-19 or Prince William County Design and Construction Standards Manual, Exhibit 1).

III. Phosphorus Removal - General

BMP phosphorus removal efficiencies are the same for Northern Virginia jurisdictions unless otherwise noted. Table 4-1 presents the accepted removal efficiencies for BMPs in Northern Virginia.

Facility Type	Removal Rate
Extended Detention Dry Pond	
Design (I) (Chart "A")	40%
Regional	50%
Enhanced Extended Detention Dry Pond	50%
Wet Pond	
Design (I) (4.0 x Vr)	50%
Design (II) (2.5 x Vr + Extended Detention)	45%
Regional (4.0 x Vr)	65%
Infiltration Trench	
Design (I) (0.5 in/imp. ac.)	30%
Design (II) (1.0 in/imp. ac.)	65%
Design (III) (2-year 2-hour storm)	70%

* NOTE: Phosphorus removal credit and specific requirements for the establishment of regional ponds may vary between jurisdictions. The designer should contact the appropriate agency before consideration of such a facility.

Table 4-1: Phosphorus Removal Efficiencies for Different BMP Facilities

IIIa. Phosphorus Removal - "Occoquan Method"

This section is for use in the jurisdictions which do not utilize CBLAD's "Chesapeake Bay Method" for phosphorus removal calculations. The "Chesapeake Bay Method" is addressed in Section IIIb of this worksheet. Please check with your local jurisdiction to determine which method to use.

?
Part 2: Compute the Weighted Average "C" Factor for the Site

(A) Area of the site — 50.78 (a) acres

(B)

Subarea Designation (1)	"C" (2)		Acres (3)		Product (4)
A-1	0.72	x	17.87	=	12.87
A-2	0.30	x	0.40	=	0.12
A-3	0.77	x	4.50	=	3.47
A-5	0.62	x	0.62	=	0.38
A-6	0.52	x	4.01	=	2.09
A-7	0.40	x	0.90	=	0.36
A-13	0.30	x	0.15	=	0.05
A-14	0.55	x	22.33	=	12.28

(b) Total = 31.62

(C) Weighted average "C" Factor (b) / (a) = (c) 0.62

Part 3: Compute the total Phosphorus Removal for the Site

Subarea Designation (1)	BMP Type (2)	Removal Eff. (%) (3)		Area Ratio (4)		"C" Factor Ratio (5)		Product (6)
A-1	EXTENDED DET. DRY POND	50	x	17.87/50.78=0.35	x	0.72/0.62=1.16	=	20.30
A-2	OPEN SPACE	100	x	0.40/50.78=0.01	x	1	=	1.00
A-3	INFILTRATION TRENCH	50	x	4.50/50.78=0.09	x	0.77/0.62=1.24	=	5.58
A-5	WET POND	50	x	0.62/50.78=0.01	x	0.62/0.62=1.0	=	0.50
A-6	DRY POND	40	x	4.01/50.78=0.08	x	0.52/0.62=0.84	=	2.68
A-8	EXTENDED DET. DRY POND	50	x	0.38/50.78=0.01	x	0.90/0.62=1.45	=	0.73
A-13	OPEN SPACE	100	x	0.15/50.78=0.003	x	1	=	0.30
A-14	WET POND	50	x	22.33/50.78=0.44	x	0.55/0.62=0.89	=	19.58
A-15	EXTENDED DET. DRY POND	50	x	1.05/50.78=0.02	x	0.64/0.62=1.03	=	1.03

(a) Total = 51.70 %

Part 4: Determine Compliance with Phosphorus Removal Requirement

(A) Select Requirement (a) 50%

Water Supply Overlay District (Occoquan Watershed) = 50% (Fairfax County and Prince William County)

Chesapeake Bay Preservation Area (New Development) = 40% (Fairfax County 50% (Prince William County)

Chesapeake Bay Preservation Area (Redevelopment) = [1-0.9 x ('I'pre / 'I'post)] x 100 = 1-0.9 X (29/28) X 100 = ___ %

(B) IF Line 3(a) 51.92% > Line 4(a) 50% then Phosphorus removal requirement is satisfied.

IV. Site Coverage

Part 5: Determine Compliance with Site Coverage Requirement

Sum all the uncontrolled onsite areas and compute a weighted average "C" factor. Do not include qualifying open space.

Subarea Designation (1)	"C" (2)		Acres (3)		Product (4)
A-7	0.40	x	0.90	=	0.36

(A) Total Equivalent uncontrolled area (a) Total = 0.36
(B) Total uncontrolled area (b) 0.90
(C) Weighted average "C" factor (a)/(b) = (c) 0.40
(D) If Line 5(b) < 20% of Line 2(a), then the site coverage requirement is satisfied. Line 5(a) is the equivalent offsite area for which coverage may be required.

100 x Line 5(b) 0.90 / Line 2(a) 52.78 = (d) 1.7 %

Part 6: Determine the Offsite Areas for which Coverage is Required

(A) For the offsite areas listed in Part 1 which flow to proposed onsite BMPs compute the equivalent areas.

Subarea Designation (1)	"C" (2)		Acres (3)		Product (4)
A-8	0.90	x	0.38	=	0.34
A-16	0.90	x	1.80	=	1.62
A-15	0.64	x	1.05	=	0.68

(a) Total = 2.64

If the equivalent offsite area, Line 6(a), draining to all proposed BMP facilities is greater than the equivalent uncontrolled area of the site shown in Line 5(a); then, the offsite area controlled by the proposed BMP facilities may be reduced until the two are equal. Otherwise, all uncontrolled offsite areas draining to the proposed BMP facilities must be included. All offsite areas thus reduced should be marked with an "*" wherever they appear in the computations.

V. Storage

Part 7: Compute The Weighted Average "C" Factor for Each Proposed BMP Facility

(A) List the areas to be controlled by the proposed BMP.

Subarea Designation (1) DRY POND-DAY CARE	"C" (2)		Acres (3)		Product (4)
A-6	0.52	x	4.01	=	2.08

(a) 4.01 (b) 2.08
(B)
(C) Weighted average "C" Factor (b)/(a) = (c) 0.52

Part 8: Determine the Storage Required for Each Proposed Facility

(A) Extended Detention Dry Pond DAY CARE
Chart A6-40 value (Appendix 4-3) for BMP storage per acre
[(4375 x "C") - 875] or [31.25 x %Imp.] = (a) 1,400 cf/ac

· Design 1 (48 hour drawdown)
Line 7(a) 4.01 x Line 8(a) 1,400 = 5,614 cf — 7,670 PROVIDED PLAN NO. 3624-SP-05

Part 7: Compute The Weighted Average "C" Factor for Each Proposed BMP Facility

(A) List the areas to be controlled by the proposed BMP.

Subarea Designation (1) DRY POND-ALDER WOODS DRIVE	"C" (2)		Acres (3)		Product (4)
A-15	0.64	x	1.05	=	0.67
A-1	0.72	x	17.87	=	12.87
A-8	0.90	x	0.38	=	0.34

(a) 19.30 (b) 13.88
(B)
(C) Weighted average "C" Factor (b)/(a) = (c) 0.72

Part 8: Determine the Storage Required for Each Proposed Facility

(A) Extended Detention Dry Pond ALDER WOODS DRIVE
Chart A6-40 value (Appendix 4-3) for BMP storage per acre
[(4375 x "C") - 875] or [31.25 x %Imp.] = (a) 2,275 cf/ac

· Design 1 (48 hour drawdown)
Line 7(a) 19.30 x Line 8(a) 2,275 = 43,908 cf 65,000 PROVIDED

Part 7: Compute The Weighted Average "C" Factor for Each Proposed BMP Facility

(A) List the areas to be controlled by the proposed BMP.

Subarea Designation (1) WET POND	"C" (2)		Acres (3)		Product (4)
A-5	0.62	x	0.62	=	0.38
A-14	0.55	x	22.33	=	12.28

(a) 22.95 (b) 12.66
(B)
(C) Weighted average "C" Factor (b)/(a) = (c) 0.55

Part 8: Determine the Storage Required for Each Proposed Facility

Part 7: Compute The Weighted Average "C" Factor for Each Proposed BMP Facility

(A) List the areas to be controlled by the proposed BMP.

Subarea Designation (1) INFILTRATION TRENCH	"C" (2)		Acres (3)		Product (4)
A-3	0.77	x	4.50	=	3.47

(a) 4.50 (b) 3.47
(B)
(C) Weighted average "C" Factor (b)/(a) = (c) 0.77

Part 8: Determine the Storage Required for Each Proposed Facility

(A) Extended Detention Dry Pond
Chart A6-40 value (Appendix 4-3) for BMP storage per acre
[(4375 x "C") - 875] or [31.25 x %Imp.] = (a) ___ cf/ac

· Design 1 (48 hour drawdown)
Line 7(a) ___ x Line 8(a) ___ = ___ cf

(B) Wet Pond
Volume of runoff per acre from mean storm.
[1452 x "C"] = 1452 x Line 7(c) = (b) ___ cf/ac

· Design 1 (2.5 x Volume of runoff from mean storm event in wet storage with extended detention above the permanent pool)
Wet Storage
2.5 x Line 7(a) ___ x Line 8(b) ___
Extended Detention
Line 7(a) ___ x Line 8(a) ___ = ___ cf

· Design 2 (4.0 x Volume of runoff from mean storm)
4.0 x Line 7(a) ___ x Line 8(b) ___ = ___ cf

(C) Infiltration Trench
· Design 1 (0.50 inch per impervious acre)
0.50 x 36.30 x (% Imp.) 0.77 x Line 4.50 = 7,183 cf — 7,501 PROVIDED PLAN NO. 3624-SP-04
· Design 2 (1.0 inch per impervious acre)
1.0 x 36.30 x (% Imp.) ___ x Line 7(a) ___ = ___ cf
· Design 3 (2-year 2-hour storm)
(2.0/12) x 43,560 x "C" ___ X Line 7(a) ___ = ___ cf

VI. Outlet Computation

Part 9: Determine The Required Orifice Size for Each Extended Detention Facility

(A) BMP storage requirement (S) from Part 8. (a) ___
(B) Maximum Head (h) at the required BMP storage from the elevation-storage curve for the facility. (b) ___
(C) Peak outflow rate (Qp) at the maximum head for a drawdown time of 48 hrs [Qp = S/(0.5 x 3600 x 48)]. 0.0000116 x Line 9(a) ___ = (c) ___
(D) Required orifice area (A) [A = Qp / (0.6 x (64.4 x h)0.5)] Line 9(c) ___ / (0.6 x (64.4 x Line 9(b) ___)0.5) = (d) ___
(E) Diameter of a circular orifice.
2.0 x (Line 9(d) ___ / 3.1415927)0.5 = ___ (e) ___

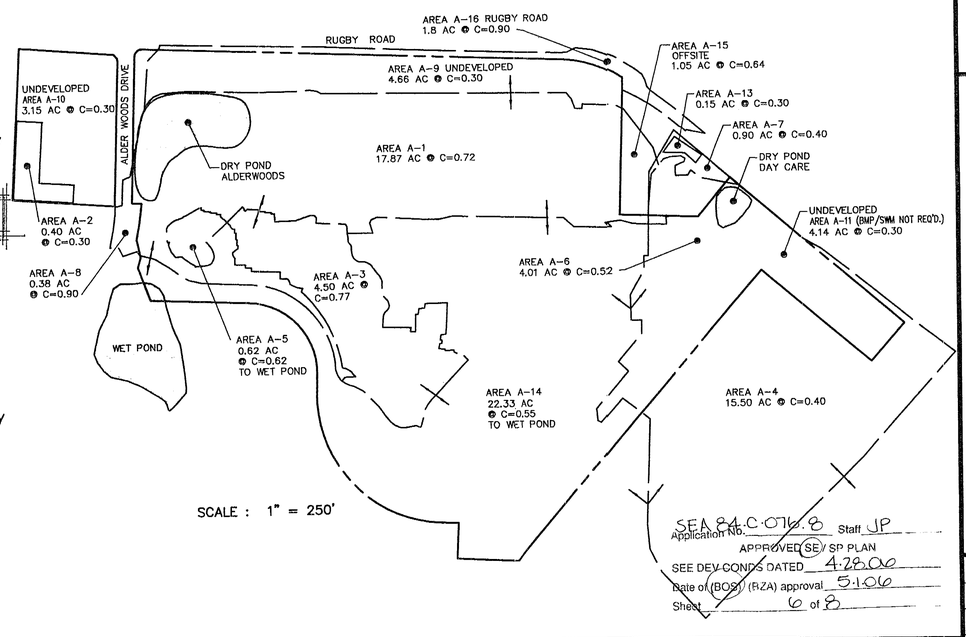

SEA 84-C-076.8 Application No. Staff JP
APPROVED (SE) / SP PLAN
SEE DEV CONDS DATED 4.28.06
Date of (BOS) (BZA) approval 5.1.06
Sheet 6 of 8

THIS SHEET FOR INFORMATION ONLY.

DATE	DESIGNER	NO.	DECRIPTION	REV. BY	APPROVED	DATE
3/20/03		F	REV. C - FACTOR, REV. COMPUTATIONS			

I HEREBY CERTIFY THAT NO OTHER REVISIONS HAVE BEEN MADE ON THESE PLANS EXCEPT THOSE PREVIOUSLY APPROVED

ENGINEER — REVISION APPROVED: DIVISION OF DESIGN REVIEW

COMMONWEALTH OF VIRGINIA — TIMOTHY CHARLES CULLETON — No. 0402 020112 — 4.7.03 — 1-15-06 — PROFESSIONAL ENGINEER

ENGINEER'S SEAL & SIGNATURE

Dewberry & Davis LLC
Engineers Planners Surveyors Landscape Architects
A Dewberry Company
8401 Arlington Boulevard
Fairfax, VA 22031-4666
(703) 849-0100 Fax (703) 849-0518

BMP COMPUTATIONS

FAIR OAKS HOSPITAL ADDITION
FAIRFAX COUNTY, VIRGINIA
SULLY DISTRICT

Drawn By	RMAC
Designed By	GAF
Checked By	DGM
Date	NOVEMBER 2000
Scale	NO SCALE
Plan Number	3624-SP-07
Zoned	C3
SHEET	~~72~~ of 87
File Number	~~SP-2027~~

SHEET 6 of 8

M-10560

THIS SHEET IS FOR INFORMATION ONLY !

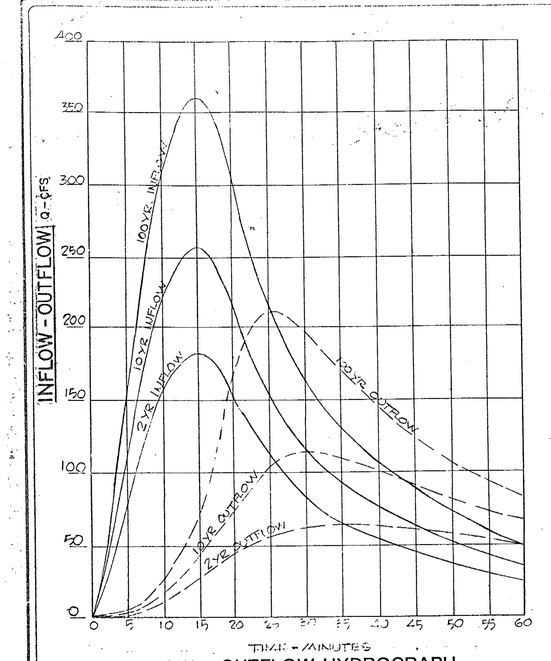

INFLOW - OUTFLOW HYDROGRAPH

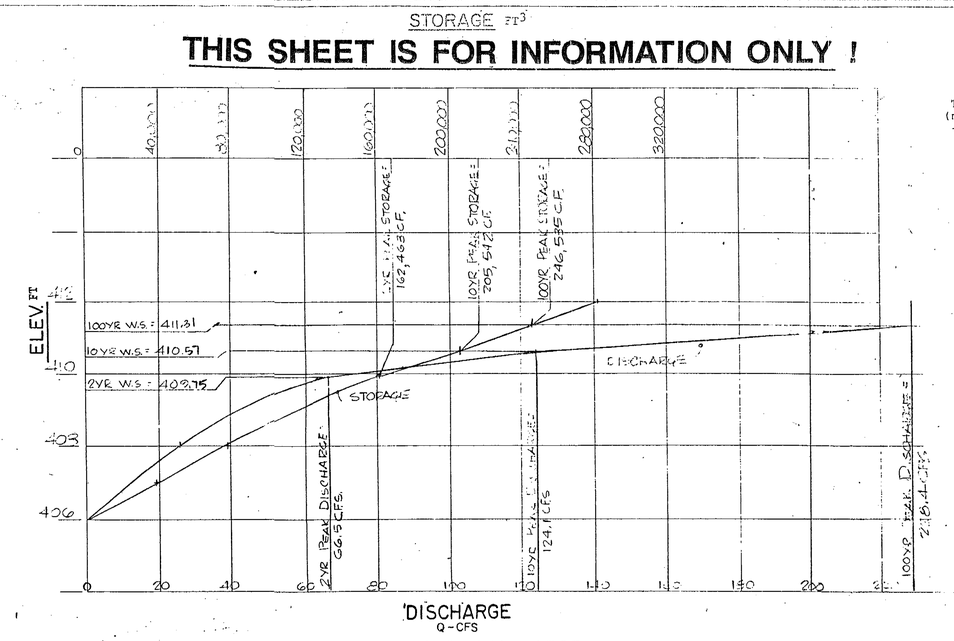

STAGE-STORAGE-DISCHARGE

2 YEAR STORM

INFLOW - OUTFLOW HYDROGRAPHS - STANDARD FLOOD ROUTING METHOD

Time (min)	Inflow (cfs)	Outflow (cfs)	Elevation (ft)	Storage (cu.ft)
0	0.0	0.0	406.00	0
3	45.4	0.3	406.10	4055
6	97.2	2.1	406.42	16669
9	143.0	7.7	406.94	37402
12	171.2	18.2	407.60	63345
15	182.3	30.4	408.24	90780
18	171.6	42.1	408.78	116107
21	139.4	52.0	409.19	135631
24	114.0	58.7	409.46	148471
27	95.8	63.1	409.63	156388
30	81.1	65.5	409.72	160734
33	70.1	66.5	409.75	162463
36	62.6	66.5	409.75	162442
39	55.4	65.8	409.73	161162
42	49.7	64.5	409.68	158900
45	44.0	62.8	409.62	155875
48	39.3	60.8	409.54	152246
51	35.0	58.6	409.45	148188
54	30.0	56.2	409.36	143709
57	27.5	53.7	409.26	138991
60	24.7	51.3	409.16	134237

RESERVOIR ROUTING SUMMARY:

Peak Inflow	:	182.3 cfs
Peak Outflow	:	66.5 cfs
Peak Reduction	:	115.8 cfs (63.5%)
Maximum Water Surface Elevation	:	409.75 ft
Maximum Storage	:	162463 cubic feet

STORM WATER DETENTION SUMMARY

AREA OF SITE = 93.6 ACRES
DRAINAGE AREA TO DETENTION POND : 100.7 ACR

PREDEVELOPMENT : TC = 15 MINUTES
C = 0.20 FOR 2 YR., C = 0.25 FOR 10 YR

$Q_2 = (0.20)(3.62)(93.6) = 67.8$ CFS

$Q_{10} = (0.25)(5.1)(93.6) = 119.3$ CFS

POSTDEVELOPMENT : TC = 15 MINUTES
C = 0.50 FOR 2YR & 10YR

$Q_2 = (0.50)(3.62)(93.6) = 169.4$ CFS

$Q_{10} = (0.50)(5.1)(93.6) = 238.7$ CFS

INCREASED RUNOFF FROM SITE

$Q_2 = 169.4$ CFS − 67.8 CFS = 101.6 CFS

$Q_{10} = 238.7$ CFS − 119.3 CFS = 119.4 CFS

ALLOWABLE DISCHARGE FROM POND

$Q_2 = [(0.50)(3.62)(100.7) - 101.6 \text{ CFS}] = 80.7$ CFS

$Q_{10} = [(0.50)(5.1)(100.7) - 119.4 \text{ CFS}] = 137.4$ CFS

ACTUAL DISCHARGE FROM POND

$Q_2 = 63.3$ CFS

$Q_{10} = 113.3$ CFS

DETENTION PROVIDED FROM POND

$Q_2 = 182.3$ CFS − 63.3 CFS = 119 CFS

$Q_{10} = 256.8$ CFS − 113.3 CFS = 143.5

WET POND STORAGE BELOW PERMANENT WATER SURFACE AT ELEV. = ON +406.00

B.M.P. STORAGE REQUIRED = 30 NO. OF
WET POND STORAGE REQUIRED = 3 TIMES
(B.M.P.) 93.0 AC = 279,150 C.F.

EL. (FT)	AREA (SQ FT)	STORAGE (CU.FT)
406.00	33,265	0
404.00	28,845	62,110
402.00	25,205	116,160
400.00	23,070	164,436
398.00	21,205	209,202
396.00	18,395	249,492
394.00	15,645	279,732
392.00	4,180	296,753

PERMANENT STORAGE REQUIRED = 279,150 CF.
PERMANENT STORAGE PROVIDED = 296,753 CF

CONTROL DEVICE DESIGN

Stage (ft)	Discharge (cfs)
0.00	0.0
0.20	0.7
0.40	1.9
0.60	3.6
0.80	5.9
1.00	8.5
1.20	11.4
1.40	14.8
1.60	18.3
1.80	21.9
2.00	25.7
2.20	29.6
2.40	33.8
2.60	38.2
2.80	42.6
3.00	47.4
3.20	52.3
3.40	57.2
3.60	62.4
3.90	70.3
4.00	74.8
4.13	83.0
4.50	115.3
5.00	178.8
5.50	258.8
6.00	347.6

ELEVATION - STORAGE - OUTFLOW RELATIONSHIP:

Elevation (feet)	Storage (cu.ft)	Outflow (cfs)
406.00	0	0.0
406.20	7942	0.7
406.40	15883	1.9
406.60	23825	3.6
406.80	31766	5.9
407.00	39708	8.5
407.20	47649	11.4
407.40	55590	14.8
407.60	63532	18.3
407.80	71473	21.9
408.00	79415	25.7
408.20	88881	29.6
408.40	98346	33.8
408.60	107812	38.2
408.80	117276	42.6
409.00	126743	47.4
409.20	136209	52.3
409.40	145673	57.2
409.60	155139	62.4
409.90	169337	70.3
410.00	174070	74.8
410.13	181262	83.0
410.50	201730	115.3
411.00	229390	178.8
411.50	257050	258.8
412.00	284710	347.6

DETENTION POND DESIGN

Initial Discharge Elevation: 406.00 feet

Elevation (ft)	Area (sq ft)	Storage (cu ft)
406.00	34825.00	0.0
408.00	44590.00	79415.0
410.00	50065.00	174070.0
412.00	60575.00	284710.0

10 YEAR STORM

INFLOW - OUTFLOW HYDROGRAPHS - STANDARD FLOOD ROUTING METHOD

Time (min)	Inflow (cfs)	Outflow (cfs)	Elevation (ft)	Storage (cu.ft)
0	0.0	0.0	406.00	0
3	63.9	0.5	406.14	5708
6	137.0	3.6	406.59	23425
9	201.4	13.4	407.32	52351
12	241.2	29.4	408.19	88336
15	256.8	47.2	408.99	126268
18	241.7	65.6	409.72	160980
21	196.4	91.0	410.22	186313
24	160.6	112.7	410.47	200109
27	134.9	123.8	410.57	205418
30	114.3	124.1	410.57	205542
33	98.7	118.0	410.52	202924
36	88.1	111.2	410.45	199108
39	78.0	104.2	410.37	194677
42	70.0	96.7	410.29	189922
45	61.9	89.0	410.20	185080
48	55.4	81.9	410.11	180258
51	49.3	76.4	410.02	175441
54	42.3	71.3	409.92	170395
57	38.8	68.0	409.81	165159
60	34.7	65.0	409.70	159806

RESERVOIR ROUTING SUMMARY:

Peak Inflow	:	256.8 cfs
Peak Outflow	:	124.1 cfs
Peak Reduction	:	132.7 cfs (51.7%)
Maximum Water Surface Elevation	:	410.57 ft
Maximum Storage	:	205542 cubic feet

100 YEAR STORM

INFLOW - OUTFLOW HYDROGRAPHS - STANDARD FLOOD ROUTING METHOD

Time (min)	Inflow (cfs)	Outflow (cfs)	Elevation (ft)	Storage (cu.ft)
0	0.0	0.0	406.00	0
3	90.2	0.7	406.20	8056
6	193.1	6.2	406.83	32929
9	284.0	22.8	407.84	73258
12	340.1	45.6	408.93	123271
15	362.1	76.4	410.03	175485
18	340.8	152.9	410.80	218108
21	276.9	212.0	411.21	240862
24	226.5	228.4	411.31	246535
27	190.3	220.1	411.26	243680
30	161.2	201.8	411.14	237342
33	139.1	180.5	411.01	229965
36	124.2	163.5	410.88	222709
39	110.0	147.6	410.75	215793
42	98.7	132.8	410.64	209343
45	87.3	119.2	410.53	203409
48	78.1	109.0	410.43	197758
51	69.6	100.3	410.33	192213
54	59.6	91.4	410.23	186589
57	54.7	82.9	410.13	181187
60	49.0	77.1	410.04	176116

RESERVOIR ROUTING SUMMARY:

Peak Inflow	:	362.1 cfs
Peak Outflow	:	228.4 cfs
Peak Reduction	:	133.7 cfs (36.9%)
Maximum Water Surface Elevation	:	411.31 ft
Maximum Storage	:	246535 cubic feet

NOTE: THESE COMPUTATIONS ARE BASED ON AS BUILT CONDITIONS.

COMMONWEALTH OF VIRGINIA
John William Ewing
8053
PROFESSIONAL ENGINEER

I HEREBY CERTIFY THAT OTHER THAN THE REVISIONS SHOWN HEREON DATED 7/13/89 NO OTHER CHANGES HAVE BEEN MADE ON THIS SHEET EXCEPT THOSE PREVIOUSLY APPROVED.

"AS BUILT"

IN ACCORDANCE WITH THE FAIRFAX COUNTY ZONING ORDINANCE, CHAPTER 112, ARTICLE XVIII, PART 8, 18-802, AND THE CODE OF THE COUNTY OF FAIRFAX, CHAPTER 101-2-6, PARAGRAPH (d)(5)(B) I, JOHN W. EWING DO HEREBY CERTIFY THAT THIS AS-BUILT CONFORMS TO THE APPROVED PLAN AS SHOWN, WHICH REPRESENTS ACTUAL CONDITIONS ON THIS SITE AS OF THIS DATE.
15 JUNE, 1989

THE NUMBER OF LOTS IN THIS SUBDIVISION ☐ WILL, ☒ WILL NOT BE INCREASED BY THIS REVISION THE IMPROVEMENTS COVERED BY THIS REVISION CONSISTING OF 3 SHEETS ARE ESTIMATED TO RESULT IN $ 0.00 ADDITIONAL COSTS FOR THE BONDED IMPROVEMENTS AND THE COST OF THESE IMPROVEMENTS ☐ WILL, ☒ WILL NOT EXCEED BY 10% THE AMOUNT OF THE ORIGINAL ESTIMATE FOR THIS PROJECT DATED 12/12/86 WHICH WAS IN THE AMOUNT OF $ 30,000.00
THIS REVISION IS BEING SUBMITTED ON BEHALF OF:
DEVELOPER'S NAME [illegible]
CERTIFIED CORRECT BY SUBMITTING ENGINEER [illegible]

SEA 84-C-076-8 Application No. Staff JP
APPROVED (SE) / SP PLAN
SEE DEV CONDS DATED 4-28-06
Date of (BOS) (BZA) approval 5-1-06
Sheet 7 of 8

FOR INFORMATION ONLY

NO.	DESCRIPTION	REVIEW BY	APPROVED	DATE
1	F.M.'s DETENTION REVISED TO WET POND WITH B.M.P. RETENTION.		JWE	7-22-89

REVISION APPROVED BY DIVISION OF DESIGN REVIEW

paciulli, simmons & associates, ltd.
• ENGINEERING • PLANNING • SURVEYING • LANDSCAPE ARCHITECTURE
11130 Main Street, Fairfax, Virginia 22030 (703) 591-8890

FAIR OAKS ESTATES - SECTION 3
RETENTION FACILITY
CENTREVILLE DISTRICT
FAIRFAX COUNTY, VIRGINIA

DETENTION COMPUTATIONS

SCALE: —
DATE: [illegible]
DRN: [illegible]
CKD: [illegible]

SHEET 7 of 8
M-10560

STORMWATER MANAGEMENT

The existing Fair Oaks Hospital Campus is served by a series of four (4) different SWM/BMP facilities. These facilities ring the Campus and provide both detention and water quality benefits. The proposed expansion discussed within this Special Exception Amendment (SEA) will effect only two of these facilities, namely the Wet Pond adjacent to the southeast corner of the property and the Extended Detention Dry Pond on the southwestern side of the property.

The proposed amendment to this Special Exception calls for the expansion to several existing buildings and their accessory structures and the deletion/demolition/removal/revision to a significant amount of surface parking and yet-to-be constructed buildings within the 10.25 acres of land that will be disturbed as part of this application. A detailed investigation into the amount of imperviousness proposed with this application that was not previously approved by Fairfax County yields an increase in imperviousness of 15,580 square feet (.36 acres). Of the 0.36 acres of additional imperviousness proposed with this application, approximately 0.34 acres drains to the existing Wet Pond and 0.02 acres to the recently (2003) revised Extended Detention Dry Pond.

Although current Fairfax County requirements only call for the detention and quality treatment of the runoff from a proposed project we are proposing the use of Low Impact Development techniques that will ensure that the total volume of runoff after the project is complete will not exceed that of existing conditions. This LID technique will take the form of an infiltration trench or other innovative BMP measure.

Water Quality Requirements:

Wet Pond: The increase in imperviousness (0.36 acres) associated with this SEA within the Wet Pond watershed (100.3 acres) does not alter the current proposed "c-value" for the watershed. The size of the watershed in relationship to the proposed increase is insignificant and less than the rounding error commonly used in "c-value" depiction. Furthermore, the BMP pool provided (296,753 cf) is several thousand cubic feet larger than the water quality volume required (279,150 cf) and if we were to extrapolate the increase in "c-value" down to three significant digits the BMP pool required would still be well short of that proposed. Please note, the BMP sizing criteria within the approved site plan has been incorporated as Sheet 6 of the SEA Plat.

Extended Detention Dry Pond: The relatively minor increase in imperviousness associated with this SEA (0.02 acres) within the Extended Detention Dry Pond watershed was already considered during its previous design. The watershed impervious value for the proposed conditions is again unchanged by this proposed revision to the SEA, and the BMP pool provided within the existing pond (65,000 cf) is significantly larger than that required (43,908 cf).

Water Quantity (Detention) Requirements:

Wet Pond: The increase in imperviousness (0.36 acres) associated with this SEA within the Wet Pond watershed (100.3 acres) does not alter the current proposed "c-value" for the watershed and as such does not increase the proposed runoff beyond that anticipated in the original Wet Pond design approved by Fairfax County. As discussed previously, the size of the watershed in relationship to the proposed increase is insignificant and less than the rounding error commonly used in "c-value" depiction. The approved routing of the existing Wet Pond has been provided For Information Only on Sheet 6 of this SEA Plat

Extended Detention Dry Pond: The relatively minor increase in imperviousness associated with this SEA (0.02 acres) within the Extended Detention Dry Pond watershed does not alter the current proposed "c-value" for the watershed and as such does not increase the proposed runoff beyond that anticipated in the approved design.

Outfall Analysis:

The changes proposed with this SEA are located within the Cub Run watershed. The proposed site improvements drain into Ox Lick Branch, a tributary of Cub Run, via natural stream channels, existing rip rap channels installed with Alder Woods Drive project under Plan #3624-PI-07, and culverts under Alder Woods Road (49" x 32" ERCCP), Rugby Road (twin 54" RCP), and Fairfax County Parkway (triple 900 x 1,500 mm or 3 ft. x 5 ft. box culverts). No changes are proposed to these existing culverts and natural and rip rap lined channels as part of this project.

The outfall channel from the **Extended Detention Dry Pond** proposed with Plan #3624-SP-07 at existing Structure #6 is designed to convey the 10-year storm runoff (2.4 cfs) at non-erosive (less than 2 cfs) velocities (see Cross Section F-F on Sheet 7 of the SEA Plat). The on-site expanded dry detention pond provides a significant reduction in peak runoff for all storms. Structure #13 is the outlet from the existing wet pond. This channel was previously improved and lined with rip-rap. The proposed channel design was based on the release rates of the approved **Wet Pond** (Fair Oaks Estates Section 8, Plan #3624-PI-03 Sheet 6 of the SEA Plat). The channel capacity (See section G-G) is 177 cfs although the actual 10-year design storm is only 134 cfs. The maximum velocity in the channel is 5.8 fps which is less than that allowed in a rip-rap channel.

Below this point the outfall channel from the existing Wet Pond and the Extended Detention Dry Pond combine. The total 10 year storm post-development runoff to the existing rip-rap stream channel below existing Structures #6 and #13 (Cross Section L-L) is also adequate to convey the proposed conditions release rate as shown previously with approved Plan #3624-SP-07.

It should also be noted that the Extended Detention Dry Pond proposed with Plan #3624-SP-07 has been designed to detain the increased runoff due to proposed development for larger frequency storms than that required in the PFM. The 100-year design storms have been detained such that the peak 100-year discharge will not overflow the roadway of Alder Woods Drive. As a result of these facts the drainage outfall for this project is adequate in our judgment, and no downstream properties will be adversely impacted by the proposed development.

MINIMUM STORMWATER INFORMATION FOR REZONING, SPECIAL EXCEPTION, SPECIAL PERMIT AND DEVELOPMENT PLAN APPLICATIONS

The following information is required to be shown or provided in all zoning applications, or a waiver request of the submission requirement with justification shall be attached. Note: Waivers will be acted upon separately. Failure to adequately address the required submission information may result in a delay in processing this application.

This information is required under the following Zoning Ordinance paragraphs:

Special Permits (8-011 2J & 2L)	Special Exceptions (9-011 2J & 2L)
Cluster Subdivision (9-615 1G & 1N)	Commercial Revitalization Districts (9-622 2A (12) & (14))
Development Plans PRC District (16-302 3 & 4L)	PRC Plan (16-303 1E & 1O)
FDP P Districts (except PRC) (16-502 1F & 1Q)	Amendments (18-202 10F & 10I)

- [x] 1. Plat is at a minimum scale of 1"=50' (unless it is depicted on one sheet with a minimum scale of 1"=100').
- [x] 2. A graphic depicting the stormwater management facility(ies) and limits of clearing and grading accommodate the stormwater management facility(ies), storm drainage pipe systems and outlet protection, pond spillways, access roads, site outfalls, energy dissipation devices, and stream stabilization measures as shown on Sheet 5.
- [x] 3. Provide: SEE SHEET 5 OF THIS PLAN SET

Facility Name/ Type & No.	On-site area served (acres)	Off-site area served (acres)	Drainage area (acres)	Footprint area (sf)	Storage Volume (cf)	If pond, dam height (ft)
DRY POND (1) (e.g. dry pond A, infil. trench, underground vault, etc)						
DRY POND (2)						
WET POND						
INFILTRATION						
Totals						

- [x] 4. Onsite drainage channels, outfalls and pipe systems are shown on Sheet 5. Pond inlet and oulet pipe systems are shown on Sheet 5.
- [x] 5. Maintenance access (road) to stormwater management facility(ies) are shown on Sheet 5. Type of maintenance access road surface noted on the plat is ASPHALT (asphalt, geoblock, gravel, etc.).
- [ ] 6. Landscaping and tree preservation shown in and near the stormwater management facility is shown on Sheet ____. N/A - THEY ARE EXISTING FACILITIES
- [x] 7. A 'stormwater management narrative' which contains a description of how detention and best management practices requirements will be met is provided on Sheet 8.
- [x] 8. A description of the existing conditions of each numbered site outfall extended downstream from the site to a point which is at least 100 times the site area or which has a drainage area of at least one square mile (640 acres) is provided on Sheet 8.
- [x] 9. A description of how the outfall requirements, including contributing drainage areas of the Public Facilities Manual will be satisfied is provided on Sheet 8.
- [x] 10. Existing topography with maximum contour intervals of two (2) feet and a note as to whether it is an air survey or field run is provided on Sheets 3.
- [ ] 11. A submission waiver is requested for N/A.
- [ ] 12. Stormwater management is not required because ____________

TIMOTHY CHARLES CULLERTON
11-9-05
11-16-05
1-13-06

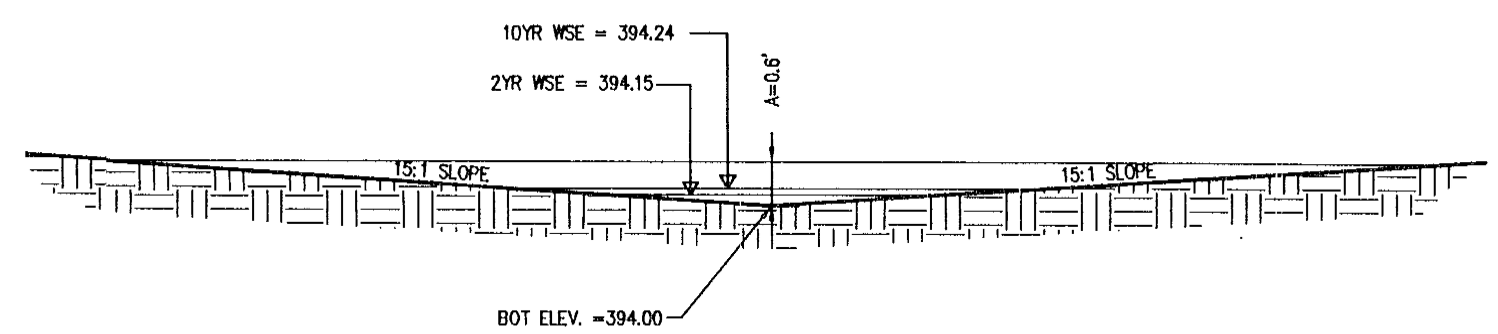

CROSS SECTION F-F

SEE SHEET 7 FOR PLAN VIEW
SCALE: 1" = 2' VERT.
1" = 2' HORZ.

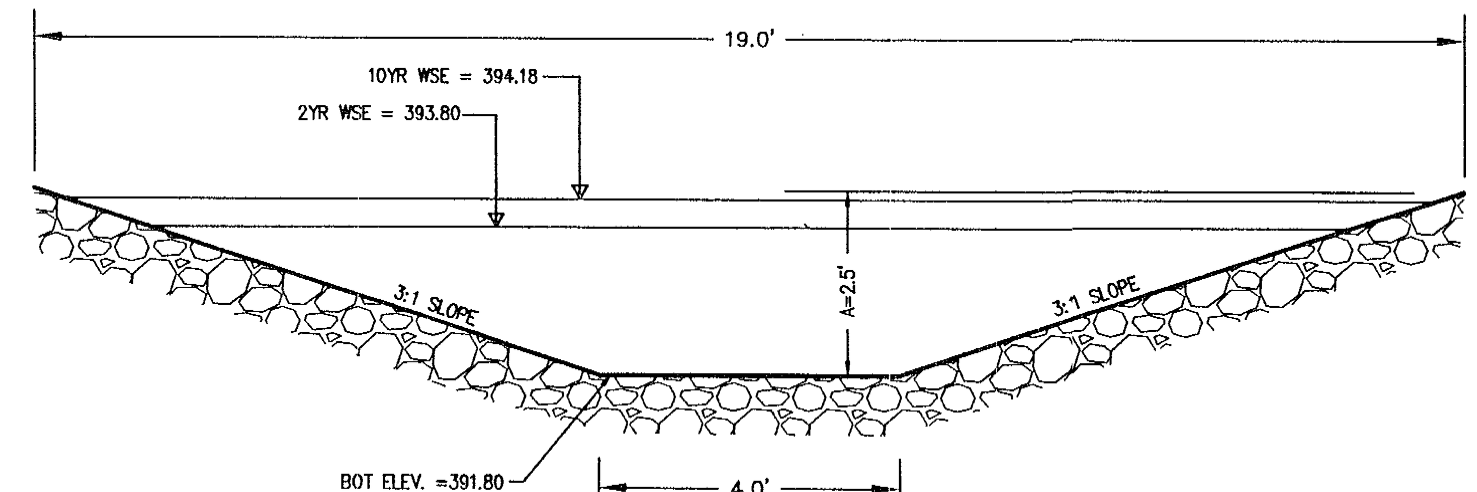

CROSS SECTION G-G

SEE SHEET 7 FOR PLAN VIEW
SCALE: 1" = 2' VERT.
1" = 2' HORZ.

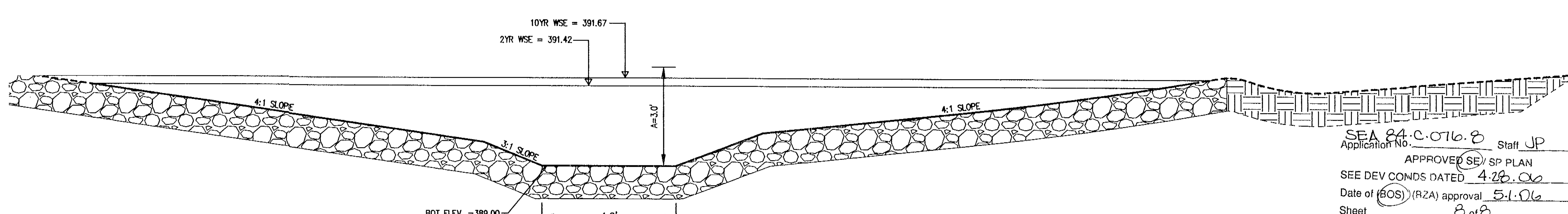

CROSS SECTION L-L

SEE SHEET 7 FOR PLAN VIEW
SCALE: 1" = 2' VERT.
1" = 2' HORZ.

Application No. SEA 84-C-076-8 Staff JP
APPROVED SE / SP PLAN
SEE DEV CONDS DATED 4-28-06
Date of (BOS) (BZA) approval 5-1-06
Sheet 8 of 8

THIS SHEET FOR INFORMATION ONLY.

I HEREBY CERTIFY THAT NO OTHER REVISIONS HAVE BEEN MADE ON THESE PLANS EXCEPT THOSE PREVIOUSLY APPROVED

DATE	DESIGNER	NO.	DECRIPTION	REV. BY	APPROVED	DATE

ENGINEER | REVISION APPROVED: DIVISION OF DESIGN REVIEW

COMMONWEALTH OF VIRGINIA
JIRI F. KOVATS
No. 19406
9-26-01
PROFESSIONAL ENGINEER

ENGINEER'S SEAL & SIGNATURE

Dewberry & Davis LLC
A Dewberry Company
Engineers
Planners
Surveyors
Landscape Architects
8401 Arlington Boulevard
Fairfax, VA 22031-4666
(703) 849-0100 Fax (703) 849-0518

CONSTRUCTION DETAILS

FAIR OAKS HOSPITAL ADDITION

SULLY DISTRICT
FAIRFAX COUNTY, VIRGINIA

Drawn By	RMAC
Designed By	GAF
Checked By	DGM
Date	NOVEMBER 2000
Scale	NO SCALE
Plan Number	3624-SP-07
Zoned	C3
SHEET	~~4~~ OF ~~8~~7
File Number	~~SP-2027~~

P:\PROJECT\F94-057\sp-add\DELV057\CD02-add.dwg Tue Sep 25 15:08:22 2001 GLEN

M-10560