BANK OF AMERICA

LORTON STATION SOUTH COMMERCIAL CENTER

ADDITION OF DRIVE-IN BANK USE TO PREVIOUSLY PROFFERED PLAN

MOUNT VERNON DISTRICT FAIRFAX COUNTY, VIRGINIA

GENERALIZED DEVELOPMENT PLAN
SPECIAL EXCEPTION AMENDMENT PLAT

PCA 1999-MV-025 /SEA 99-V-020

JULY 5, 2006
REVISED THROUGH OCTOBER 23, 2006

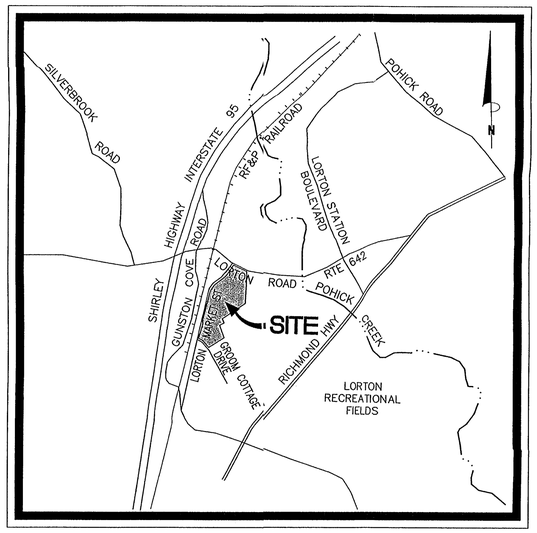

VICINITY MAP
SCALE: 11" = 2000'

APPLICANT:

BANK OF AMERICA
OAK CLIFF OFFICE
400 S. ZANG BOULEVARD
TX2-501-11-01
DALLAS, TX 75208-6601

PREPARED BY:

BOWMAN CONSULTING GROUP, LTD.
14020 THUNDERBOLT PLACE, SUITE 300
CHANTILLY, VA 20151

AGENT:

COOLEY GODWARD, LLP
ONE FREEDOM SQUARE
RESTON TOWN CENTER
11951 FREEDOM DRIVE
RESTON, VA 20190

Application No. PCA 1999-MV-025-02 Staff S.W.
APPROVED DEVELOPMENT PLAN
(DP) (GDP) (CDP) (FDP)
SEE PROFFERS DATED Dec. 1, 2006
Date of (BOS)/(PC) approval Jan. 8, 2007
Sheet 1 of 4
Concurrent w/ SEA 99-V-020-02
See Development Conditions dated Nov. 29 2006

SHEET INDEX

1. COVER SHEET
2. NOTES & TABULATIONS
3. LIMITS OF PCA / SEA
4. OVERALL SHOPPING CENTER SITE (RZ-1999-MV-025) *
   * ORIGINAL APPROVED (RZ 1999-MV-025, SE 99-V-020) AS PREPARED BY DEWBERRY & DAVIS. FOR INFORMATION ONLY.

RECEIVED
Department of Planning & Zoning
OCT 24 2006
Zoning Evaluation Division

Bowman CONSULTING

Bowman Consulting Group, Ltd.
14020 Thunderbolt Place
Suite 300
Chantilly, Virginia 20151

Phone: (703) 464-1000
Fax: (703) 481-9720
www.bowmanconsulting.com
© Bowman Consulting Group, Ltd.

COVER SHEET
BANK OF AMERICA
LORTON STATION SOUTH COMMERCIAL CENTER
MOUNT VERNON DISTRICT FAIRFAX COUNTY, VIRGINIA

SEA-
COUNTY PROJECT NUMBER

COMMONWEALTH OF VIRGINIA
MATTHEW J. TAUSCHER
No.000832
CERTIFIED LANDSCAPE ARCHITECT

PLAN STATUS	
06/09/06	1st SUBMISSION
07/05/06	2nd SUBMISSION
10/09/06	3rd SUBMISSION
10/23/06	4th SUBMISSION

DATE	DESCRIPTION

JB	RRM	MJT
DESIGN	DRAWN	CHKD

SCALE: H: AS NOTED V:
JOB No. -
DATE: JUNE 2006
FILE No. -
SHEET 1 OF 4
BCG#

Cad file name: P:\1299 - LORTON STATION SOUTH\1299-14-001 (PLN)\Planning\01-COVER-BANK.dwg

GENERAL NOTES:

1. THIS PARTIAL PROFFERED CONDITION AMENDMENT PLAT & SPECIAL EXCEPTION AMENDMENT (PCA/SEA) ACCOMPANIES AN APPLICATION TO PERMIT A CATEGORY 5 DRIVE-IN BANK USE TO BE LOCATED ON PAD 'C'.

2. THE SUBJECT PROPERTY IS CURRENTLY ZONED TO THE C-6 ZONING DISTRICT AND IS LOCATED IN THE MOUNT VERNON MAGISTERIAL DISTRICT.

3. THE SUBJECT PROPERTY WAS ORIGINALLY APPROVED PURSUANT TO RZ 1999-MV-025 AND SE 99-V-020 ON APRIL 20, 2000, WHICH INCLUDED THE REZONING OF 32.97 ACRES. SUBSEQUENTLY, THE REZONING HAS BEEN AMENDED TO INCLUDE A CHILD CARE CENTER UNDER PLAN (PCA 1999-MV-025 AND SEA 99-V-020). SITE PLAN 4865-SP-11 WAS APPROVED BY FAIRFAX COUNTY ON SEPTEMBER 3, 2004 AND IS CURRENTLY UNDER CONSTRUCTION. THE CONSTRUCTION OF THE BANK LOCATED ON PAD 'C' HAS BEEN COMPLETED WITH BUILDING PERMIT #03310B1000.

3A. FOR THE PURPOSES OF THE COUNTY TAX RECORDS, THE SUBJECT PROPERTY IS IDENTIFIED AS TAX MAP 107-4 ((23)) E4. HOWEVER, ACCORDING TO THE FAIRFAX COUNTY LAND RECORDS IN DEED BOOK 15624 AND PAGE 979, THE LEGAL DESCRIPTION OF THE SUBJECT PROPERTY IS LORTON MARKET STREET PARCEL E-1A EQUAL TO 17.20 ACRES.. THE AREA THAT IS SUBJECT TO THIS PARTIAL PCA/SEA IS EQUAL TO 1.34 ACRES ±.

4. THE TOPOGRAPHY SHOWN ON SHEET 3, WITHIN THE AREA OF PAD 'C', IS AT A CONTOUR INTERVAL OF TWO (2) FEET AS OBTAINED FROM AERIAL PHOTOGRAPHY BY AIR SURVEY, INC..

5. THE METES & BOUNDS ASSOCIATED WITH PARCEL E-1A (TAX MAP PARCEL E4SHOWN ON THE BOUNDARY SURVEY IS FROM A PLAT PREPARED BY BOWMAN CONSULTING, AND RECORDED IN DB 15624/PG 979.

6. STORMWATER MANAGEMENT (SWM) AND BEST MANAGEMENT PRACTICES (BMP) REQUIREMENTS FOR THIS SITE HAVE BEEN PROVIDED WITHIN THE ON-SITE SWM/BMP FACILITIY PER APPROVED PLANS FOR LORTON MARKET STREET (FAIRFAX COUNTY PLAN # 4865-SP-005). THESE ABOVE GROUND FACILITIES, LOCATED ADJACENT TO AND NORTH OF PAD 'C', ARE GENERALLY SHOWN IN THE LOCATIONS DEPICTED ON SHEET 3 OF THIS PLAN.

7. THE LANDSCAPING AND OPEN SPACE AREAS AS REPRESENTED ON THE ORIGINAL REZONING (RZ 1999-MV-25/ SE 99-V-020) ARE SUBJECT TO MINOR MODIFICATIONS AT TIME OF FINAL ENGINEERING AND DESIGN. LANDSCAPING AND TREE COVER WILL BE PROVIDED IN ACCORDANCE WITH THE PROVISIONS OF ARTICLE 13 OF THE ZONING ORDINANCE. LANDSCAPING TO BE PROVIDED AS SHOWN ON SHEET 3 OF THE PLAN.

8. TO THE BEST OF OUR KNOWLEDGE, THERE ARE NO UTILITY EASEMENTS HAVING A WIDTH OF TWENTY-FIVE (25) OR GREATER LOCATED ON WITHIN THE SUBJECT PROPERTY OF THIS AMENDMENT.

9. THERE ARE EXISTING STRUCTURES ON THE SUBJECT PROPERTY BUILT WITH SITE PLAN (FFX. CO. #4865-SP-11).

10. THE NORTH/SOUTH SPINE ROAD IS DEDICATED AS A PUBLIC STREET (LORTON MARKET STREET) AND WAS BUILT WITH SITE PLAN #4865-SP-005.

11. THERE ARE NO TRAILS REQUIRED BY THE COMPREHENSIVE PLAN IMMEDIATELY ADJACENT TO THE SUBJECT PROPERTY.

12. THERE IS NO FLOODPLAIN WITHIN THE SUBJECT PROPERTY AS DESIGNATED BY THE FEDERAL INSURANCE ADMINISTRATION, UNITED STATES GEOLOGICAL SURVEY OR FAIRFAX COUNTY. THERE IS NO RESOURCE PROTECTION AREAS (RPA) OR ENVIRONMENTAL QUALITY CORRIDOR (EQC) WITHIN THE SUBJECT PROPERTY.

13. THE VAST MAJORITY OF THE SITE HAS BEEN CLEARED AND REGRADED. THE EXISTING WETLANDS ON THE EASTERN EDGE OF THE PROPERTY WILL BE PRESERVED AND PROTECTED. THE DEVELOPER HAS REQUESTED A WAIVER FROM THE REQUIREMENT THAT AN EXISTING VEGETATION MAP (EVM) BE SUBMITTED WITH THIS APPLICATION.

14. THE MINIMUM YARD REQUIREMENTS SET FORTH IN THE C-6 DISTRICT REGULATIONS OF THE ZONING ORDINANCE ARE AS FOLLOWS:

    FRONT YARD: CONTROLLED BY A 45' ANGLE OF BULK PLANE, BUT NOT LESS THAN 40 FEET.

    SIDE YARD: NO REQUIREMENT.

    REAR YARD: 20 FEET.

15. PURSUANT TO THE PREVIOUSLY APPROVED PROFFERS, APPLICATION AND SITE PLAN (RZ 1999-MV-025/PCA 1996-MV-037/SE 99-V-020), A WAIVER OF THE BARRIER REQUIREMENTS WAS GRANTED IN ACCORDANCE WITH SECT. 13-304 OF THE ZONING ORDINANCE ALONG THE EASTERN PROPERTY LINE.

16. PURSUANT TO THE PREVIOUSLY APPROVED PROFFERS, APPLICATION AND SITE PLAN (RZ 1999-MV-025/PCA 1996-MV-037/SE 99-V-020), A MODIFICATION OF THE TRANSITIONAL SCREENING REQUIREMENTS AND A WAIVER OF THE BARRIER ALONG THE SOUTHERN BOUNDARY WAS GRANTED IN ACCORDANCE WITH SECT. 13-304 OF THE ZONING ORDINANCE. IT IS NOTED THAT ADDITIONAL LANDSCAPING WILL BE PROVIDED ON THE PARCEL IMMEDIATELY SOUTH OF THIS BOUNDARY AS PART OR RZ 1999-MV-057.

17. THE SUBJECT PROPERTY IS LOCATED IN SUBUNIT E-8 OF THE LORTON-SOUTH ROUTE 1 PLANNING SECTOR OF THE ADOPTED COMPREHENSIVE PLAN FOR A MIX OF USES. THE PROPOSED DEVELOPMENT IS CONSISTENT WITH THAT RECOMMENDATION.

18. AT A MINIMUM PARKING WILL BE PROVIDED IN ACCORDANCE WITH THE PROVISIONS OF ARTICLE 11 OF THE ZONING ORDINANCE. THE DEVELOPER RESERVES THE RIGHT TO PROVIDE FEWER OR MORE THAN THE NUMBER OF PARKING SPACES PRESENTED HEREON PROVIDED THAT THE AMOUNT OF OPEN SPACES IS NOT DECREASED.

19. IT IS NOTED THAT ACCESS TO AND FROM LOT 44 AS SHOWN HEREON IS BUT ONE OPTION. THE DEVELOPER RESERVES THE RIGHT TO PROVIDE A DIFFERENT ACCESS POINT(S) PROVIDED IT IS AGREED UPON BY THE OWNERS OF LOT 44 AND APPROVED BY DPW&ES AND THE ZONING ADMINISTRATOR.

20. A STATEMENT THAT CONFIRMS THE OWNERSHIP OF THIS SUBJECT PROPERTY AND THE NATURE OF THE DEVELOPER'S INTEREST IN SAME IS PROVIDED IN AN AFFIDAVIT SUBMITTED SEPARATELY.

21. THE FOOTPRINT OF THE BUILDING SHOWN HEREON IS EXISTING AND MAY BE MODIFIED IN ACCORDANCE WITH PAR. 4 OF SECT 9-004 AND PAR. 5 SECT. 18-204 OF THE ZONING ORDINANCE. THE TOTAL GROSS FLOOR AREA AND THE BUILDING HEIGHT PRESENTED IN THE TABULATIONS IS TO BE CONSIDERED A MAXIMUM. THE DEVELOPER RESERVES THE RIGHT TO DEVELOP A LESSER AMOUNT OF GROSS FLOOR AREA (GFA) FROM THE TOTAL PRESENTED IN THE TABULATION AND THE BUILDING FOOTPRINT. ANY CHANGE TO THE GFA WILL MODIFY THE ASSOCIATED PARKING LOT LAYOUT ACCORDINGLY. ADDITIONAL PARKING SPACES MAY BE PROVIDED WHERE A BUILDING FOOTPRINT IS REDUCED, SHIFTED OR MODIFIED SO LONG AS THE AREA OF LANDSCAPED OPEN SPACE PROVIDED IS NOT DECREASED. IT IS UNDERSTOOD THAT SUCH DEVIATIONS ARE PERMITTED PROVIDED THE RESULTS ARE IN SUBSTANTIAL CONFORMANCE WITH THIS PLAN.

22. ADDITIONAL SITE FEATURES SUCH AS PLANTERS, ENTRANCE SIGNS, TRASH/RECYCLING FACILITIES AND/OR WALLS NOT REPRESENTED HEREON MAY BE PROVIDED.

23. DEVELOPMENT OF THE PROPERTY HAS AND WILL COMMENCE WHEN ALL REQUIRED APPROVALS AND PERMITS HAVE BEEN OBTAINED. IT IS CURRENTLY ANTICIPATED THAT DEVELOPMENT OF THE AMENDED PORTION OF THIS APPLICATION WILL COMMENCE UPON RECEIPT OF THE REQUIRED APPROVALS AND PERMITS. HOWEVER, THIS MAY CHANGE SUBJECT TO MARKET CONDITIONS.

24. TO THE BEST OF OUR KNOWLEDGE, THERE ARE NO GRAVES LOCATED ON THE PROPERTY SUBJECT TO THIS AMENDMENT.

25. TO THE BEST OF OUR KNOWLEDGE THE USE REPRESENTED HEREON WILL NOT GENERATE, UTILIZE, STORE, TREAT AND/OR DISPOSE OF ANY HAZARDOUS OR TOXIC SUBSTANCES AS SET FORTH IN TITLE 40, CODE OF FEDERAL REGULATIONS PART 116.4, 302.4, AMD 355; ANY HAZARDOUS WASTE AS SET FORTH IN COMMONWEALTH OF VIRGINIA/DEPARTMENT OF WASTE MANAGEMENT VR 672-10-1 – VIRGINIA HAZARDOUS WASTE MANAGEMENT REGULATIONS; AND/OR ANY PETROLEUM PRODUCTS AS DEFINED IN TITLE 40, CODE OF FEDERAL REGULATIONS PART 280; HOWEVER, ANY SUCH SUBSTANCES THAT MAY BE UTILIZED, STORED AND/OR DISPOSED OF IN CONJUNCTION WITH THE USES WILL BE IN ACCORDANCE WITH SAID REGULATIONS.

26. WITH THE EXCEPTION OF THE PRESERVATION OF EXISTING VEGETATION ON THE EASTERN PORTION OF THE SITE, THERE ARE NO AREAS THAT HAVE SCENIC ASSETS OR NATURAL FEATURES DESERVING OF PROTECTION OR PRESERVATION ON THE SITE.

27. THERE ARE NO COMMUNITY OR PUBLIC FACILITIES BEING PROPOSED IN CONJUNCTION WITH THE DEVELOPMENT OF THIS PROPERTY.

28. PUBLIC IMPROVEMENTS HAVE INCLUDED THE CONSTRUCTION AND DEDICATION OF LORTON MARKET STREET AND RESERVATION OF LAND AREA FOR A FUTURE SANITARY SEWER LINE TO BE CONSTRUCTED BY OTHERS.

29. ARCHITECTURAL SKETCHES/PHOTO DOCUMENTATION OF THE BUILDING ARE INCLUDED UNDER SEPARATE COVER.

30. WITH THE EXCEPTION OF THE WAIVERS REQUESTED ABOVE, TO THE BEST OF OUR KNOWLEDGE, THE PROPOSED DEVELOPMENT OF THE SUBJECT PROPERTY CONFORMS TO ALL CURRENT APPLICABLE LAND DEVELOPMENT ORDINANCES, REGULATIONS, AND ADOPTED STANDARDS.

ZONING ORDINANCE SECTION 9-011
SPECIAL EXCEPTION SUBMISSION REQUIREMENTS

1. APPLICATION FORM TO BE SUBMITTED UNDER SEPARATE COVER.
2. TWENTY-THREE (23) COPIES OF A 24" X 36" PLAT AT A SCALE OF NOT LESS THAN (1" = 50') AND A 8.5" X 11" REDUCTION SHALL BE PROVIDED UPON REQUEST AT THE TIME OF APPLICATION ACCEPTANCE.
   - A. BOUNDARY OF THE ENTIRE PROPERTY WITH BEARING & DISTANCES HAS BEEN SHOWN ON SHEET 4. SEE GENERAL NOTE#5.
   - B. THE SITE TABULATIONS FOR THE PARTIAL PCA/SEA ON 1.34 AC. AND THE OVERALL TABULATIONS OF THE ORIGINAL REZONING (PCA 1999-MV-025/SEA 99-V-20) ON 32.97 AC. ± HAVE BEEN PROVIDED ON SHEET 2 OF THE PLAN.
   - C. SCALE AND NORTH ARROW PROVIDED ON EACH SHEET AS REQUIRED.
   - D. THE BANK OF AMERICA WAS CONSTRUCTED AT THE LORTON STATION SOUTH COMMERCIAL CENTER (SECTION 7) UNDER FAIRFAX COUNTY SITE PLAN 4865-SP-11. THE DRIVE THROUGH CANOPY DIMENSIONS ARE AS FOLLOWS: HEIGHT 20' ±, WIDTH 38' ± LENGTH 50' ±. SEE GENERAL NOTE #21 FOR ADDITIONAL INFORMATION.
   - E. MINIMUM YARD REQUIREMENTS AND A GRAPHIC DEPICTION OF THE BULK PLANE HAVE BEEN PROVIDED ON SHEET 2 OF THE PLAN. DISTANCES FROM EXISTING STRUCTURES AND LOT LINES ARE AS SHOWN ON SHEET 3 OF THE PLAN. SEE GENERAL NOTE #14.
   - F. EXISTING ROADS WITH NAME, ROUTE NUMBERS, AND DIMENSIONS ARE AS SHOWN ON SHEET 3 OF THE PLAN. SEE GENERAL NOTE #28.
   - G. INGRESS AND EGRESS ARE AS SHOWN ON SHEET 4 OF THE PLAN.
   - H. THE PARKING TABULATIONS FOR THE PARTIAL PCA/SEA ON 1.34 AC. AND THE OVERALL PARKING TABULATIONS OF THE ORIGINAL REZONING (PCA 1999-MV-025/SEA 99-V-20) ON 32.33 AC.± HAVE BEEN PROVIDED ON SHEET 2 OF THE PLAN. DISTANCES OF PARKING FROM THE PROPERTY LINE ARE AS SHOWN ON SHEET 3 OF THE PLAN. SEE GENERAL NOTE #18.
   - I. THE SITE WILL BE SERVED BY PUBLIC WATER AND SEWER SERVICE TO BE PROVIDED BY FAIRFAX COUNTY WATER AND FAIRFAX COUNTY WASTE WATER COLLECTION RESPECTIVELY.
   - J. NO STORMWATER MANAGEMENT IS REQUIRED FOR THIS SITE (LESS THAN 2,500 SF OF LAND DISTURBING ACTIVITY PROPOSED). THE ABOVE GROUND STORMWATER MANAGEMENT/BMP FACILITY BUILT WITH FAIRFAX COUNTY SITE PLAN 4865-SP-005 AND AS SHOWN ON SHEET 3 OF THE PLAN WAS ENGINEERED TO HANDLE ALL THE STORMWATER MANAGEMENT AND BEST MANAGEMENT PRACTICE (BMP) REQUIREMENTS FOR THIS SITE. SEE GENERAL NOTE #6.
   - K. THE MAXIMUM F.A.R. HAS BEEN STATED IN THE SITE TABULATIONS FOR THE PARTIAL PCA/SEA ON 1.34 AC.± AND THE OVERALL TABULATIONS OF THE ORIGINAL REZONING (RZ 1999-MV-025/SE 99-V-20) ON 32.97 AC.± AS SHOWN ON SHEET 2 OF THE PLAN.
   - L. THE EXISTING TOPOGRAPHY SHOWN ON SHEET 3 OF THE PLAN IS AT A CONTOUR INTERVAL OF 2' AND WAS MAPPED USING AERIAL PHOTRGRAMATTIC METHODS BY AIR SURVEYS, INC.
   - M. THE BANK OF AMERICA AT THE LORTON STATION SOUTH COMMERCIAL CENTER (SECTION 7) WAS CONSTRUCTED AND LANDSCAPED UNDER FAIRFAX COUNTY SITE PLAN 4865-SP-11. INFORMATION REGARDING SITE LANDSCAPING IS SHOWN ON SHEET 3 OF THE PLAN.
   - N. THERE ARE NO FLOODPLAINS, EQC, OR RPA THAT EXIST ON THE SITE. SEE GENERAL NOTE #12.
   - O. ANY ADDITIONAL SITE FEATURES AND OR AMENITIES IF PROVIDED ARE AS SHOWN ON SHEET 3 OF THE PLAN.
   - P. SEE GENERAL NOTE #8.
   - Q. THERE ARE NO REQUIRED TRAILS PER THE COMPREHENSIVE PLAN THAT ARE TO BE PROVIDED ON THIS PARTIAL PCA/SEA.
   - R. THE BANK OF AMERICA AT THE LORTON STATION SOUTH COMMERCIAL CENTER (SECTION 7) WAS CONSTRUCTED UNDER FAIRFAX COUNTY SITE PLAN 4865-SP-11. SEE GENERAL NOTE #24.
   - S. SEAL AND SIGNATURE PROVIDED ON EACH SHEET OF THE PLAT AS REQUIRED.
3. FAIRFAX COUNTY TAX MAP AT A SCALE OF (1"-500') TO BE PROVIDED UNDER SEPARATE COVER.
4. ALL PHOTO DOCUMENTATION OF THE PROPERTY TO BE PROVIDED UNDER SEPARATE COVER.
5. NOT APPLICABLE FOR COMMERCIAL DEVELOPMENT.
6. AFFIDAVIT TO BE PROVIDED UNDER SEPARATE COVER.
7. A WRITTEN STATEMENT TO BE PROVIDED UNDER SEPARATE COVER.
8. OWNERSHIP AND INTEREST TO BE PROVIDED UNDER SEPARATE COVER.
9. NOT APPLICABLE
10. APPLICATION FEE TO BE INCLUDED UNDER SEPARATE COVER.

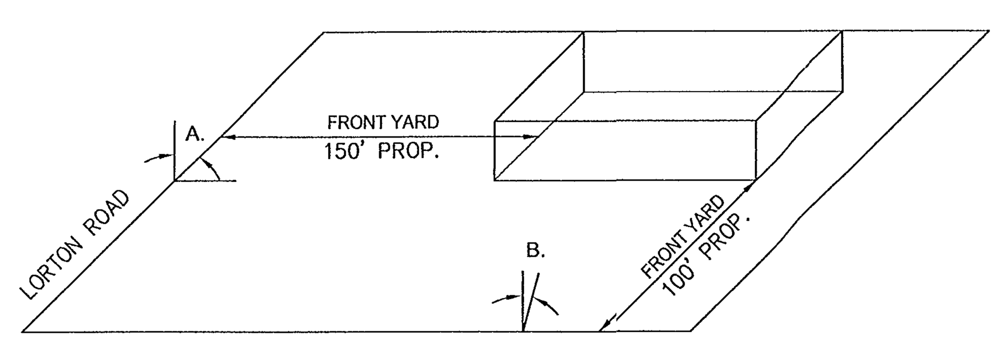

ANGLE OF BULK PLANE DETAIL
** NOT TO SCALE

BULK REGULATION

MAXIMUM BUILDING HEIGHT:	60'
PROPOSED BUILDING HEIGHT:	40'±
MINIMUM YARD REQUIREMENTS:	
FRONT YARD:	45° BUT NOT LESS THAN 40'
SIDE YARD:	NO REQUIREMENT
REAR YARD:	20'
MAXIMUM FLOOR AREA RATIO :	0.40

BULK PLANE PROFILES
** NOT TO SCALE

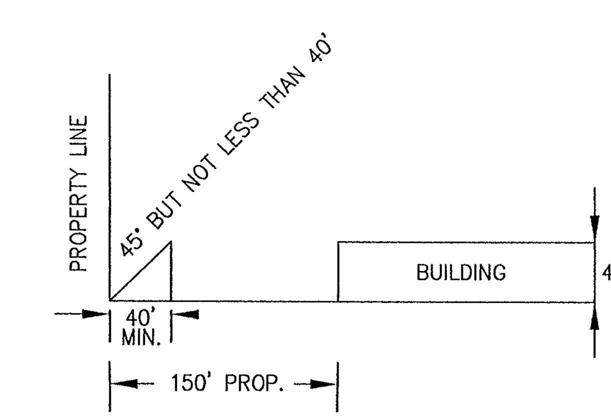

(A.) FRONT LORTON ROAD

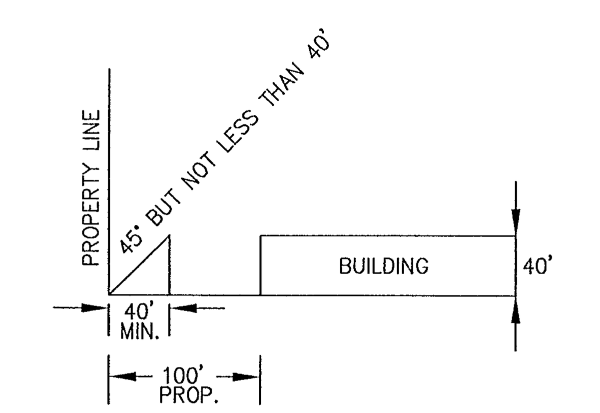

(B.) FRONT LORTON MARKET STREET

SITE TABULATIONS:

GDP / SEA FOR PAD 'C' DRIVE-IN BANK

PARTIAL PCA/SEA SUBJECT LAND AREA	1.34 ± AC
GROSS FLOOR AREA (GFA) (PAD 'C' SUBJECT OF THIS APPLICATION)	UP TO 10,000 SF
DRIVE-IN BANK (G.F.A.)	4,500 ± SF
PAD 'C' FLOOR AREA RATIO	.08
PARKING REQUIRED:	4 SPACES PER 1,000 SF OF GROSS FLOOR AREA = 40 SPACES
PARKING PROVIDED:	47 SPACES + 2 HANDICAPPED ACCESSIBLE SPACES
DRIVE-IN WINDOW LANES PROPOSED:	3 LANES
STACKING SPACES REQUIRED 1 ST LANE:	8 SPACES
STACKING SPACES PROVIDED 1 ST LANE:	8 SPACES
STACKING SPACES REQUIRED FOR LANES 2 & 3:	2 SPACES EACH
STACKING SPACES PROVIDED FOR LANES 2 & 3:	2 SPACES EACH
(SEE SHEET 3 FOR STACKING GEOMETRY)	
OPEN SPACE REQUIRED (15%):	.20 AC.
OPEN SPACE PROVIDED (30%):	.40 AC.

OVERALL SHOPPING CENTER ORIGINAL APPROVAL (CASE # RZ-1999-MV-025)

CURRENT ZONING	C-6
TOTAL LAND AREA	32.97± AC
APPROVED GROSS FLOOR AREA	187,750 SF
SHOPPING CENTER (MAIN BUILDING)	134,500 SF
SPECIAL EXCEPTION USES (PADS A, B & C)	16,250 SF
NON-RETAIL	37,000 SF
TOWNHOUSE OFFICE	21,000 SF
SHOPPING CENTER (MAIN BUILDING)	16,000 SF
PERMITTED MAXIMUM FLOOR AREA RATIO	0.40
APPROVED FLOOR AREA RATIO	0.13
MAXIMUM BUILDING HEIGHT PERMITTED/PROPOSED	40 FT*
PARKING SPACES REQUIRED	737
RETAIL (150,750 ÷ 1,000 x 4)	603
OFFICE & OTHER NONRETAIL USES (37,000 ÷ 1,000 x 3.6)	134
PARKING SPACES PROVIDED	912**
OPEN SPACE REQUIRED (15%)	4.64± AC
OPEN SPACE PROVIDED (30%)	10.00± AC

* EXCLUSIVE OF THE PROPOSED 65± FOOT CLOCK TOWER

** THERE ARE APPROXIMATELY 65 SPACES RESERVED FOR COMMUTER PARKING DURING NORMAL WORKING HOURS INCLUDED IN THIS TOTAL

Application No. PCA 1999-MV-025-02 Staff S.W.
APPROVED DEVELOPMENT PLAN
(DP) (GDP) (CDP) (FDP)
SEE PROFFERS DATED Dec. 1, 2006
Date of (BOS) (PC) approval Jan. 8, 2007
Sheet 2 of 4
Concurrent w/ SEA 99-V-020-02
See Development Conditions dated Nov. 29, 2006

MINIMUM STORMWATER INFORMATION FOR REZONING, SPECIAL EXCEPTION, SPECIAL PERMIT AND DEVELOPMENT PLAN APPLICATIONS

The following information is required to be shown or provided in all zoning applications, or a waiver request of the submission requirement with justification shall be attached. Note: Waivers will be acted upon separately. Failure to adequately address the required submission information may result in a delay in processing this application.

This information is required under the following Zoning Ordinance paragraphs:

Special Permits (8-011 2J & 2L)	Special Exceptions (9-011 2J & 2L)
Cluster Subdivision (9-615 1G & 1N)	Commercial Revitalization Districts (9-622 2A (12) & (14))
Development Plans PRC District (16-302 3 & 4L)	PRC Plan (16-303 1E & 1O)
FDP P Districts (except PRC) (16-502 1F & 1Q)	Amendments (18-202 10F & 10I)

☐ 1. Plat is at a minimum scale of 1"=50' (unless it is depicted on one sheet with a minimum scale of 1"=100').

☐ 2. A graphic depicting the stormwater management facility(ies) and limits of clearing and grading accommodate the stormwater management facility(ies), storm drainage pipe systems and outlet protection, pond spillways, access roads, site outfalls, energy dissipation devices, and stream stabilization measures as shown on Sheet _____.

☐ 3. Provide:

Facility Name/ Type & No.	On-site area served (acres)	Off-site area served (acres)	Drainage area (acres)	Footprint area (sf)	Storage Volume (cf)	If pond, dam height (ft)
(e.g. dry pond A, infil trench, underground vault, etc.)						
Totals						

☐ 4. Onsite drainage channels, outfalls and pipe systems are shown on Sheet _____. Pond inlet and oulet pipe systems are shown on Sheet _____.

☐ 5. Maintenance access (road) to stormwater management facility(ies) are shown on Sheet _____. Type of maintenance access road surface noted on the plat is __________ (asphalt, geoblock, gravel, etc.).

☐ 6. Landscaping and tree preservation shown in and near the stormwater management facility is shown on Sheet _____.

☐ 7. A 'stormwater management narrative' which contains a description of how detention and best management practices requirements will be met is provided on Sheet _____.

☐ 8. A description of the existing conditions of each numbered site outfall extended downstream from the site to a point which is at least 100 times the site area or which has a drainage area of at least one square mile (640 acres) is provided on Sheet _____.

☐ 9. A description of how the outfall requirements, including contributing drainage areas of the Public Facilities Manual will be satisfied is provided on Sheet _____.

☐ 10. Existing topography with maximum contour intervals of two (2) feet and a note as to whether it is an air survey or field run is provided on Sheets __________.

☐ 11. A submission waiver is requested for ______________________________.

☑ 12. Stormwater management is not required because THERE IS NO NEW CONSTRUCTION AND LESS THAN 2,500 S.F. OF LAND DISTURBING ACTIVITY PROPOSED WITH THIS APPLICATION. SEE GENERAL NOTE #6.

Bowman
CONSULTING
Bowman Consulting Group, Ltd.
14020 Thunderbolt Place
Suite 300
Chantilly, Virginia 20151
Phone: (703) 464-1000
Fax: (703) 481-9720
www.bowmanconsulting.com

© Bowman Consulting Group, Ltd.

NOTES & TABULATIONS
BANK OF AMERICA
LORTON STATION SOUTH COMMERCIAL CENTER
MOUNT VERNON DISTRICT
FAIRFAX COUNTY, VIRGINIA

SEA-
COUNTY PROJECT NUMBER

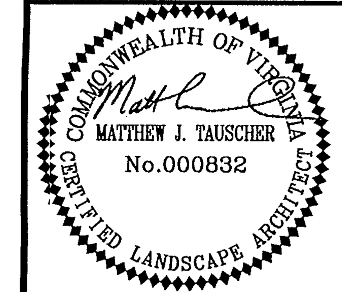

PLAN STATUS	
06/09/06	1st SUBMISSION
07/05/06	2nd SUBMISSION
10/09/06	3rd SUBMISSION
10/23/06	4th SUBMISSION
DATE	DESCRIPTION

JB DESIGN	RRM DRAWN	MJT CHKD
SCALE	H: NO SCALE V:	
JOB No.	-	
DATE :	JUNE 2006	
FILE No.	-	
SHEET	2 OF 4	

BCG#

Cad file name : P:\1299 - LORTON STATION SOUTH\1299-14-001 (PLN)\Planning\02-NOTES TABS.dwg

Application No. SEA-MV-1299 Staff S. Gu.
APPROVED DEVELOPMENT PLAN
(DP) (CDP) (CDP) (FDP)
SEE PROFFERS DATED Dec. 4, 2006
Date of (BOS) (PC) approval Jan. 8, 2007
Sheet 3 of 4
Concurrent w/ SEA 96-V-076-02
See Development Conditions dated Nov. 29, 2006

LEGEND

- EXISTING CONTOUR
- EXISTING TREE CANOPY
- PROPOSED SIDEWALK
- EDGE OF PAVEMENT (EP)
- CENTERLINE OF RIGHT-OF-WAY (℄)
- CURB LINE
- EXISTING TREELINE
- LARGE SHADE TREE (2"–2.5" CALIPER)
- ORNAMENTAL TREE (1"–1.5" CALIPER)
- EVERGREEN TREE (6'–7' HEIGHT)
- GROUNDCOVER AND/OR ORNAMENTAL GRASS
- SMALL SHRUB
- PARKING SPACE ASSOCIATED WITH BANK
- 4 — DRIVE-IN AUTOMOBILE STACKING ALIGNMENT
- SD — STORM DRAIN
- 12" W/M — WATERMAIN

EASEMENTS LEGEND

- IE1 — EX. INGRESS/EGRESS EASEMENT D.B. 16162, PG. 1784
- IE4 — EX. INGRESS/EGRESS EASEMENT DB 700 PG 153
- MA — EX. MAINTENANCE ACCESS EASEMENT D.B. 13375, PG. 491
- SD — EX. STORM DRAIN EASEMENT D.B. 13375, PG. 491
- SS — EX. SANITARY SEWER EASEMENT D.B. 12069, PG. 1233; D.B. 12373, PG. 2037; D.B. 12443, PG. 484
- SS1 — EX. SANITARY SEWER EASEMENT D.B. 14418, PG. 813
- SW — EX. SIDEWALK ACCESS EASEMENT D.B. 13375, PG. 491
- SWM — EX. STORM WATER MANAGEMENT EASEMENT D.B. 13375, PG. 491
- RP — EX. RESTRICTIVE PLANTING EASEMENT D.B. 13375, PG. 491
- W — EX. WATERLINE EASEMENT D.B. 13375, PG. 491
- W1 — EX. WATERLINE EASEMENT D.B. 16162, PG. 1784

N: 380,302.715
E: 2,565,633.217

LORTON ROAD – RT. 642
(RIGHT-OF-WAY VARIES)

EXISTING SWM FACILITY
PER SITE PLAN # 4865-SP-05

PARCEL "E"

VA. STATE GRID NORTH

S 34°24'21" W
283.28'

FLUSH CURB

PROPOSED
DRIVE-IN BANK
(4,500 SQ FT +/–)

231.84'

N 55°35'39" W

OVERHEAD CANOPY
(50'L x 38'W x 20' H)
ALL DIMENSIONS ARE PLUS/MINUS

PROPOSED
MONUMENT
SIGN

P.O.B.
N 75°53'22" E
98.87'

10' WIDE
ASPHALT TRAIL
PER VDOT

R=1393.90'
L=195.00'

R=845.00'

SIDEWALK
215.60'

CART STORAGE AREA

EX. 20' TEMP. POND
ACCESS ESMT.
DB.13375 PG.491
(TO BE VACATED)

EX. SIGHT DISTANCE
ESM'T PER PROJ.
#4865-SP-05

LORTON MARKET STREET

D.B. 13037, PG. 1430
D.B. 13375, PG. 491
VARIABLE WIDTH RIGHT-OF-WAY

D.B. 13037 PG. 1430
D.B. 13375 PG. 491

EX. TB-1

PROPOSED
MONUMENT
SIGN

EX. SIGHT
DISTANCE ESM'T
PER PROJ.
#4865-SP-05

EX. TREELINE
(TYP.)

DRIVE-IN BANK LOCATION (PAD SITE 'C')

SCALE: 1"=30'

CURVE TABLE

CURVE	RADIUS	ARC LENGTH	CHORD LENGTH	CHORD BEARING	DELTA ANGLE	TANGENT
C1	1493.90'	231.97'	231.73'	S 69°07'54" E	08°53'48"	116.22'
C2	845.00'	345.57'	343.16'	N 41°44'08" E	23°25'53"	175.23'
C3	845.00'	215.60'	215.02'	N 37°19'46" E	14°37'08"	108.39'
C4	1493.90'	195.00'	194.87'	S 68°25'22" E	07°28'45"	97.64'

SPECIAL EXCEPTION AMENDMENT NOTES:

1. THIS PARTIAL PCA/SEA PLAT DEMONSTRATES THE PROPOSED LOCATION OF THE DRIVE-IN BANK AND THE ABILITY TO PROVIDE ADEQUATE PARKING.
2. THERE IS NO NEW CONSTRUCTION PROPOSED WITH THIS PLAN.
3. THE APPLICANT RESERVES THE RIGHT TO ADJUST THE SHRUB PLANTINGS WITHIN THE SUBJECT AREA OF THIS PLAN IN ORDER TO RESPOND TO SITE CONDITIONS, TO AVOID UTILITY EASEMENTS THAT MAY BE PRESENT, AND/OR TO CONFORM TO AN ALTERNATIVE PLANTING CONCEPT. HOWEVER, THE SHRUB PLANTINGS SHALL BE IN SUBSTANTIAL CONFORMANCE FOR SIZE AND QUANTITY AS SHOWN WITH THIS PLAN.

GRAPHIC SCALE
30 0 15 30 60 120
(IN FEET)
1 inch = 30 ft.

Cad file name : P:\1299 - LORTON STATION SOUTH\1299-14-001 (PLN)\Planning\03-PCA SEA.dwg

Bowman CONSULTING
Bowman Consulting Group, Ltd.
4720-D Thunderbolt Place
Suite 300
Chantilly, Virginia 20151
Phone: (703) 464-1000
Fax: (703) 481-9720
www.bowmanconsulting.com

© Bowman Consulting Group, Ltd.

LIMITS PF PCA / SEA

BANK OF AMERICA

LORTON STATION SOUTH COMMERCIAL CENTER

MOUNT VERNON DISTRICT

FAIRFAX COUNTY, VIRGINIA

SEA-
COUNTY PROJECT NUMBER

COMMONWEALTH OF VIRGINIA
MATTHEW J. TAUSCHER
No.000832
CERTIFIED LANDSCAPE ARCHITECT

PLAN STATUS	
06/09/06	1st SUBMISSION
07/05/06	2nd SUBMISSION
10/09/06	3rd SUBMISSION
10/23/06	4th SUBMISSION

DATE	DESCRIPTION

JB	RRM	MJT
DESIGN	DRAWN	CHKD

SCALE H: 1" = 30' V:

JOB No. -

DATE : JUNE 2006

FILE No. -

SHEET 3 OF 4

BCG#

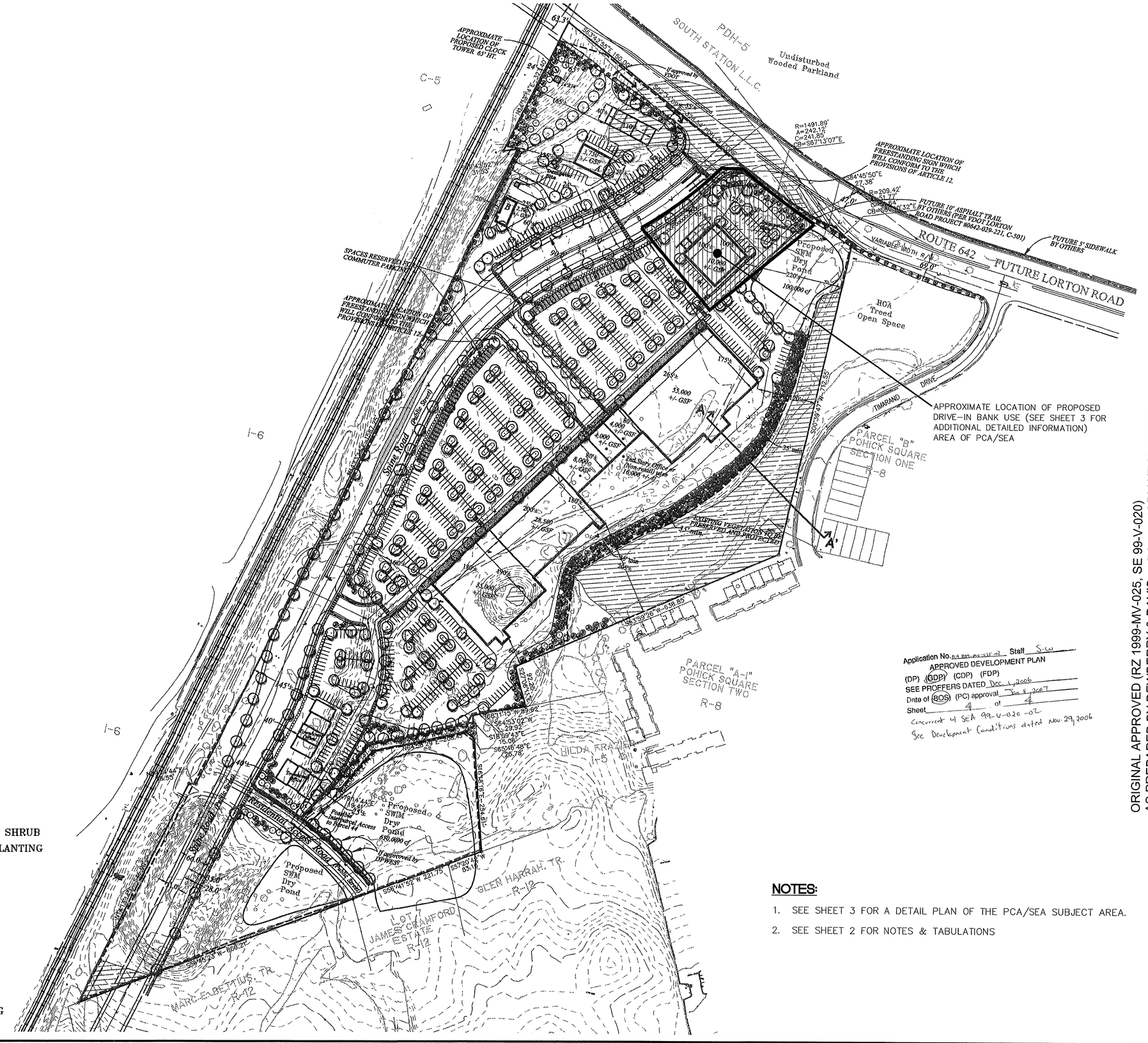

ORIGINAL APPROVED (RZ 1999-MV-025, SE 99-V-020)
AS PREPARED BY DEWBERRY & DAVIS - FOR INFORMATION ONLY

Application No. RZ 1999-MV-025 SE 99-V-020 Staff S.W
APPROVED DEVELOPMENT PLAN
(DP) (GDP) (CDP) (FDP)
SEE PROFFERS DATED Dec. 4, 2006
Date of BOS (PC) approval Jan 8, 2007
Sheet 4 of 4
Concurrent w/ SEA 99-V-026-02
See Development Conditions dated Nov. 29, 2006

LEGEND

- PROPOSED SHADE/STREET TREES
- PROPOSED ORNAMENTAL TREE
- PROPOSED EVERGREEN TREE
- PROPOSED EVERGREEN AND/OR DECIDUOUS SHRUB
- PROPOSED LOW GROUNDCOVER/SEASONAL PLANTING
- LIMITS OF CLEARING AND GRADING
- EXISTING WETLANDS
- EXISTING WATER
- WATER
- SANITARY SEWER
- EXISTING SANITARY SEWER
- SIDEWALK
- PROPOSED VDOT TRAIL
- SPACES RESERVED FOR COMMUTER PARKING

NOTES:

1. SEE SHEET 3 FOR A DETAIL PLAN OF THE PCA/SEA SUBJECT AREA.
2. SEE SHEET 2 FOR NOTES & TABULATIONS

Bowman CONSULTING

Bowman Consulting Group, Ltd.
14020 Thunderbolt Place
Suite 300
Chantilly, Virginia 20151
Phone: (703) 464-1000
Fax: (703) 464-1020
www.bowmanconsulting.com

© Bowman Consulting Group, Ltd.

OVERALL SHOPPING CENTER SITE (RZ-1999-MV-025)

BANK OF AMERICA

LORTON STATION SOUTH COMMERCIAL CENTER

MOUNT VERNON DISTRICT FAIRFAX COUNTY, VIRGINIA

SEA-
COUNTY PROJECT NUMBER

COMMONWEALTH OF VIRGINIA
MATTHEW J. TAUSCHER
No.000832
LICENSED LANDSCAPE ARCHITECT

PLAN STATUS	
06/09/06	1st SUBMISSION
07/05/06	2nd SUBMISSION
10/09/06	3rd SUBMISSION
10/23/06	4th SUBMISSION
DATE	DESCRIPTION

JB	RRM	MJT
DESIGN	DRAWN	CHKD

SCALE H: 1"= 100' V:

JOB No. -

DATE : JUNE 2006

FILE No. -

SHEET 4 OF 4

BCG#

Cad file name : P:\1299 - LORTON STATION SOUTH\1299-14-001 (PLN)\Planning\04-OVERALL SITE.dwg