CURVE TABLE						
CURVE	LENGTH	RADIUS	TANGENT	DELTA	CHD BRG	CHORD
C1	80.29'	1000.00'	40.17'	4°36'01"	S00°56'57"W	80.27'
C2	45.00'	693.00'	22.51'	3°43'13"	S06°50'36"W	44.99'

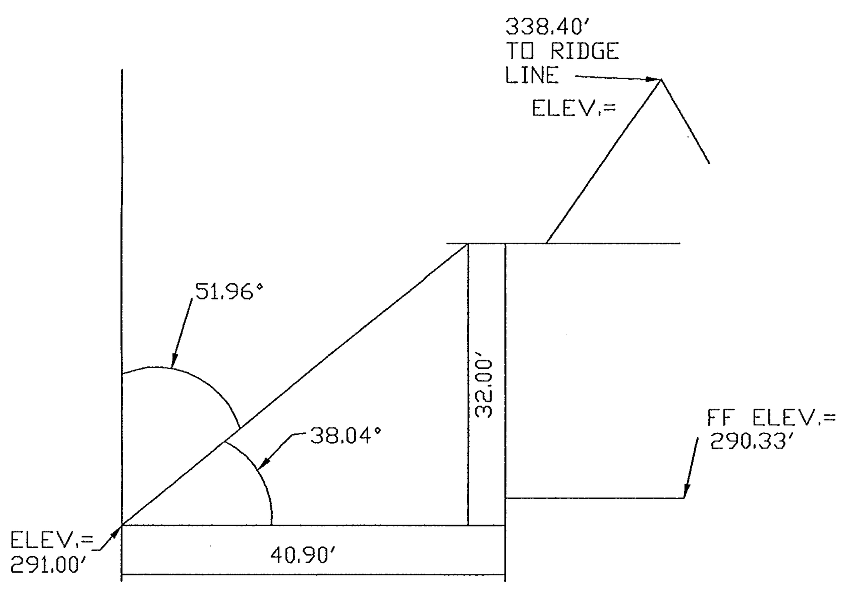

ANGLE OF BULK PLANE (BALLS HILL ROAD)

VA STATE GRID NORTH

REQUESTED WAIVERS AND MODIFICATIONS

1. RE-AFFIRMATION OF THE BELOW LISTED WAIVERS AND MODIFICATIONS IS HEREBY REQUESTED WITH THIS APPLICATION.
2. PURSUANT TO FAIRFAX COUNTY ZONING ORDINANCE SECTION 9-624, MODIFICATION OF REGULATIONS IN SECTION 10-104 OF THE ZONING ORDINANCE FOR CONTAINMENT STRUCTURES ASSOCIATED WITH OUTDOOR RECREATION AREAS.

PREVIOUSLY GRANTED WAIVERS, MODIFICATIONS:

1. A WAIVER OF THE REQUIREMENT TO SUBMIT AN EVM GRANTED AUG. 2, 2004 BY THE BOARD OF SUPERVISORS
2. MODIFICATION OF TRANSITIONAL SCREENING AND WAIVER OF BARRIER REQUIREMENT ALONG BALLS HILL ROAD AND GEORGETOWN PIKE IN ACCORDANCE WITH ITEM 6 OF THE SPECIAL PERMIT WAS GRANTED OCT. 26, 1988 BY THE BZA.
3. A WAIVER OF THE 75' SETBACK FROM I-495 ROW FOR THE MODULAR BUILDINGS WAS GRANTED AUG. 2, 2004 BY THE BOARD OF SUPERVISORS.
4. MODIFICATION OF TRANSITIONAL SCREENING AND WAIVER OF BARRIER REQUIREMENT ALONG BALLS HILL ROAD AND GEORGETOWN PIKE WAS GRANTED BY THE BOARD OF SUPERVISORS ON AUGUST 2, 2004

SHEET INDEX:

1. SEA/GDP/PCA PLAT
2. SWM COMPUTATIONS EXHIBIT SHEET
3. BMP COMPUTATIONS EXHIBIT SHEET W/COUNTY SWM LIST

STORM WATER MANAGEMENT NARRATIVE:

ALL STORM WATER RUNOFF FOR THIS SITE AND ASSOCIATED WITH THIS SEA, SHEET FLOWS THROUGH THE PARKING LOT INTO AN EXISTING BMP/EXTENDED DETENTION SWM FACILITY AS SHOWN ON FAIRFAX COUNTY PLAN # 6622-SP-03, APPROVED ON 02/26/96. (SEE ATTACHED SHEETS 2 AND 3, THE AS-BUILT SWM AND BMP COMPUTATION SHEETS W/ COUNTY SWM CHECKLIST.)

STORM WATER MANAGEMENT FACILITIES EXIST ON THE SITE IN AN EXISTING DRYPOND SYSTEM AND WILL BE MAINTAINED ACCORDING TO THE APPLICABLE ORDINANCES AND PRACTICES OF FAIRFAX COUNTY UNLESS WAIVED OR MODIFIED BY THE DIRECTOR OF DEM. ADEQUATE STORM DRAINAGE SYSTEM IN ACCORDANCE WITH THE PUBLIC FACILITIES MANUAL STANDARDS AND DESIGN CRITERIA HAVE BEEN PROVIDED. THERE IS NO INCREASE IN IMPERVIOUS AREA WITH THIS SEA APPLICATION.

AS LESS THAN 2,500 SF OF LAND WILL BE DISTURBED BY THE ACTIVITIES APPROVED WITH THIS AMENDMENT, NO FURTHER STORM WATER INFORMATION IS REQUIRED PURSUANT TO FAIRFAX COUNTY ZONING ORDINANCE SECTION 9-011(J). ADDITIONALLY, AS LESS THAN 2,500 SF OF LAND WILL BE DISTURBED BY THE ACTIVITIES APPROVED WITH THIS AMENDMENT, NO EXISTING VEGETATION MAP (EVM) IS REQUIRED PURSUANT TO FAIRFAX COUNTY ZONING ORDINANCE SECTION 9-011(M).

CONTACTS:

1. McGUIRE WOODS, LLP – ATTN: JOANNA FRIZZELL
1750 TYSONS BLVD. SUITE 1800
McLEAN, AV. 22102
PHONE: 703-712-5349

2. OAKCREST SCHOOL – ATTN: ELLEN CAVANAGH
850 BALLS HILL ROAD
McLEAN, AV. 22101
PHONE: 703-790-5450

3. ANCL ARCHITECTS – ATTN: ALEXIA LEVITE
3299 K STREET, N.W., SUITE 600
WASHINGTON, D.C. 20007
PHONE: 202-337-3987

4. VIKA, INC – ATTN: JOHN AMATETTI
8180 GREENSBORO DRIVE, SUITE 200
McLEAN, VA. 22102
PHONE: 703-442-7800

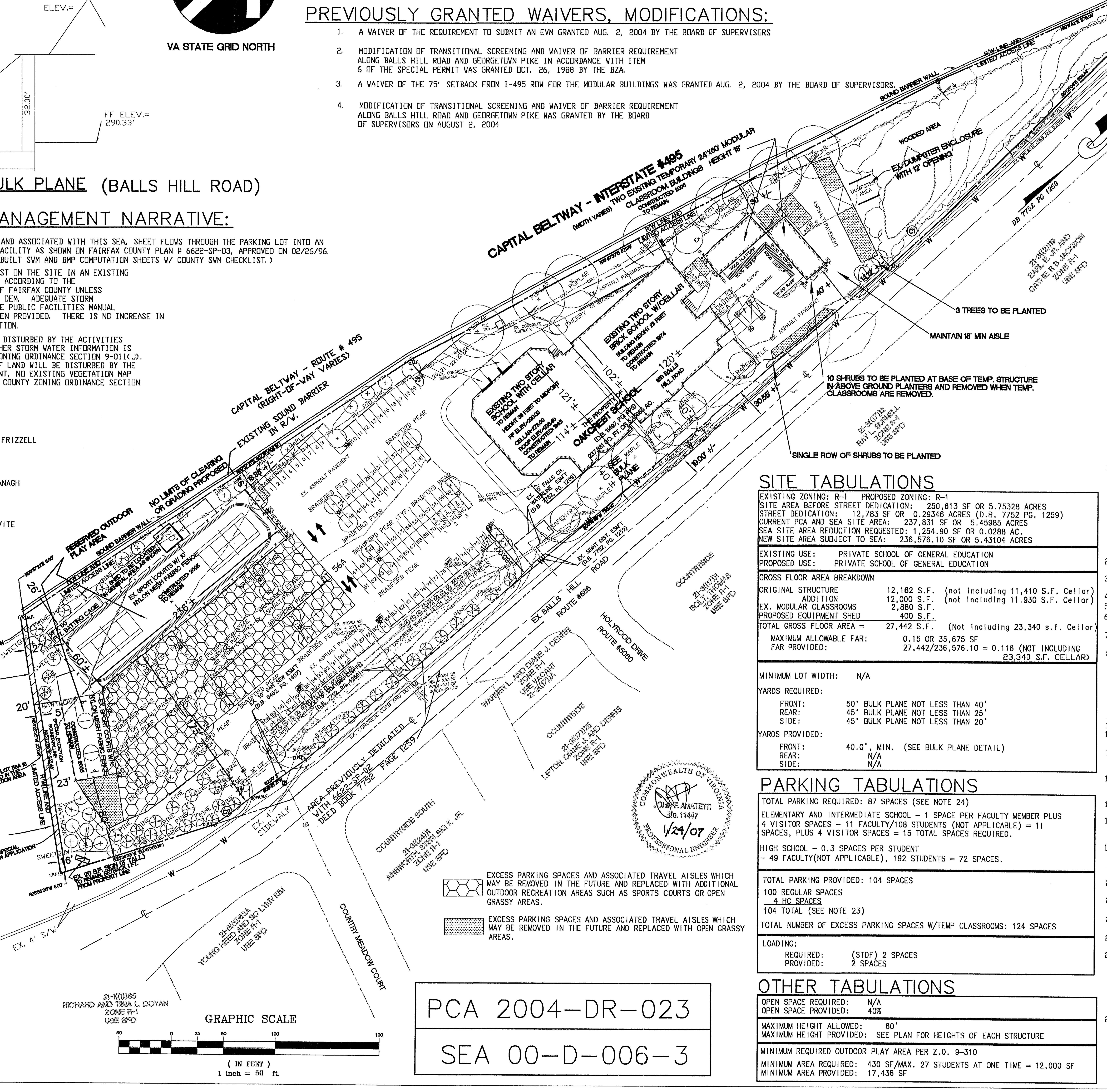

EXCESS PARKING SPACES AND ASSOCIATED TRAVEL AISLES WHICH MAY BE REMOVED IN THE FUTURE AND REPLACED WITH ADDITIONAL OUTDOOR RECREATION AREAS SUCH AS SPORTS COURTS OR OPEN GRASSY AREAS.

EXCESS PARKING SPACES AND ASSOCIATED TRAVEL AISLES WHICH MAY BE REMOVED IN THE FUTURE AND REPLACED WITH OPEN GRASSY AREAS.

COMMONWEALTH OF VIRGINIA JOHN F. AMATETTI No. 11447 1/24/07 PROFESSIONAL ENGINEER

PCA 2004-DR-023

SEA 00-D-006-3

SITE TABULATIONS

EXISTING ZONING: R-1 PROPOSED ZONING: R-1
SITE AREA BEFORE STREET DEDICATION: 250,613 SF OR 5.75328 ACRES
STREET DEDICATION: 12,783 SF OR 0.29346 ACRES (D.B. 7752 PG. 1259)
CURRENT PCA AND SEA SITE AREA: 237,831 SF OR 5.45985 ACRES
SEA SITE AREA REDUCTION REQUESTED: 1,254.90 SF OR 0.0288 AC.
NEW SITE AREA SUBJECT TO SEA: 236,576.10 SF OR 5.43104 ACRES

EXISTING USE: PRIVATE SCHOOL OF GENERAL EDUCATION
PROPOSED USE: PRIVATE SCHOOL OF GENERAL EDUCATION

GROSS FLOOR AREA BREAKDOWN

ORIGINAL STRUCTURE	12,162 S.F.	(not including 11,410 S.F. Cellar)
ADDITION	12,000 S.F.	(not including 11.930 S.F. Cellar)
EX. MODULAR CLASSROOMS	2,880 S.F.	
PROPOSED EQUIPMENT SHED	400 S.F.	
TOTAL GROSS FLOOR AREA =	27,442 S.F.	(Not including 23,340 s.f. Cellar)
MAXIMUM ALLOWABLE FAR:	0.15 OR 35,675 SF	
FAR PROVIDED:	27,442/236,576.10 = 0.116 (NOT INCLUDING 23,340 S.F. CELLAR)	

MINIMUM LOT WIDTH: N/A

YARDS REQUIRED:
- FRONT: 50' BULK PLANE NOT LESS THAN 40'
- REAR: 45' BULK PLANE NOT LESS THAN 25'
- SIDE: 45' BULK PLANE NOT LESS THAN 20'

YARDS PROVIDED:
- FRONT: 40.0', MIN. (SEE BULK PLANE DETAIL)
- REAR: N/A
- SIDE: N/A

PARKING TABULATIONS

TOTAL PARKING REQUIRED: 87 SPACES (SEE NOTE 24)

ELEMENTARY AND INTERMEDIATE SCHOOL – 1 SPACE PER FACULTY MEMBER PLUS 4 VISITOR SPACES – 11 FACULTY/108 STUDENTS (NOT APPLICABLE) = 11 SPACES, PLUS 4 VISITOR SPACES = 15 TOTAL SPACES REQUIRED.

HIGH SCHOOL – 0.3 SPACES PER STUDENT – 49 FACULTY(NOT APPLICABLE), 192 STUDENTS = 72 SPACES.

TOTAL PARKING PROVIDED: 104 SPACES
100 REGULAR SPACES
4 HC SPACES
104 TOTAL (SEE NOTE 23)

TOTAL NUMBER OF EXCESS PARKING SPACES W/TEMP CLASSROOMS: 124 SPACES

LOADING:
- REQUIRED: (STDF) 2 SPACES
- PROVIDED: 2 SPACES

OTHER TABULATIONS

OPEN SPACE REQUIRED: N/A
OPEN SPACE PROVIDED: 40%

MAXIMUM HEIGHT ALLOWED: 60'
MAXIMUM HEIGHT PROVIDED: SEE PLAN FOR HEIGHTS OF EACH STRUCTURE

MINIMUM REQUIRED OUTDOOR PLAY AREA PER Z.O. 9-310
MINIMUM AREA REQUIRED: 430 SF/MAX. 27 STUDENTS AT ONE TIME = 12,000 SF
MINIMUM AREA PROVIDED: 17,436 SF

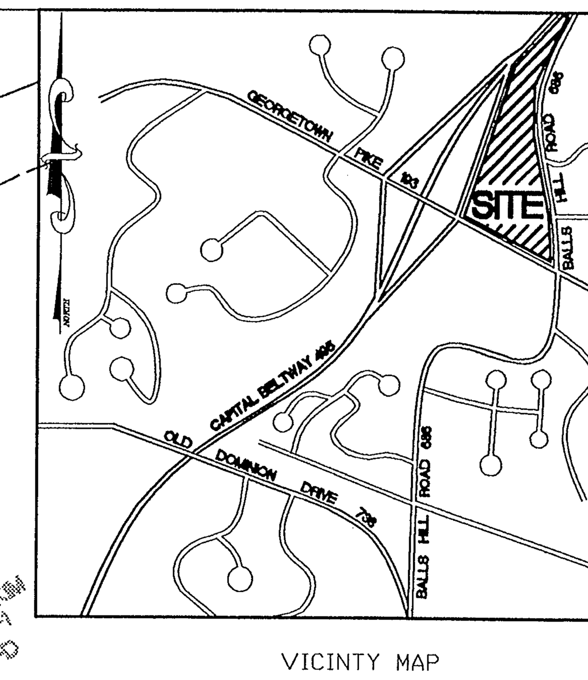

VICINTY MAP

SOILS MAP DATA **SCALE: 1"500'**

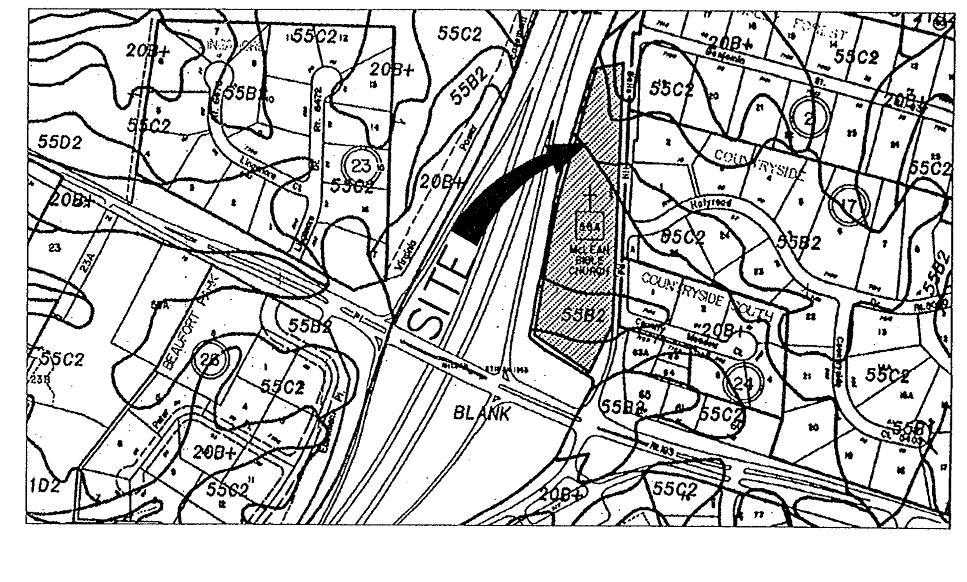

NOTES

1. THE PROPERTY THAT IS THE SUBJECT OF THIS SPECIAL EXCEPTION PLAT CONSISTS OF THE PARCEL IDENTIFIED ON THE FAIRFAX COUNTY TAX ASSESSMENT MAP AS 21-3-((01))-0056-A. THE PROPERTY IS CURRENTLY ZONED R-1 AND IS OWNED BY OAKCREST SCHOOL BOARD OF DIRECTORS (D.B. 11497 PG. 0975). THE PURPOSE OF THE SEA PLAT IS TO SHOW THE ADDITIONAL OUTDOOR RECREATIONAL AREAS WITH FENCING. THIS SITE IS UNDER SPA 73-D-151-2 APPROVED 10-26-88 AND UNDER A A VARIANCE CVC-88-D-095 APPROVED OCT 18 1988. THE VARIANCE ALLOWS A BUILDING SETBACK OF 44' FROM THE ROW OF I-495. THE PROPERTY IS ALSO UNDER SEA 00-D-006-2 FOR USE AS A SCHOOL AND ESTABLISHING A SETBACK OF LESS THAN 75' FROM THE I-495 ROW APPROVED AUG. 2, 2004.
2. THE HORIZONTAL DATUM IS TRUE NORTH SHOWN ON AN AS-BUILT BY CALDWELL, SIKES, AND ASSO. DATED FEB. 8, 1993. PROPERTY BOUNDARY BY SURVEY, VIKA INC. 2006
3. THE TOPOGRAPHY SHOWN HEREON HAS BEEN TAKEN FROM THE AS-BUILT AND EXISTING RECORDS REFERENCED IN NOTE #2. THE CONTOUR INTERVAL IS TWO (2) FEET.
4. THE BOUNDARY SHOWN HEREON IS FROM A FIELD RUN SURVEY BY VIKA INC.
5. PUBLIC WATER AND SANITARY SEWER ARE AVAILABLE AS SHOWN HEREON.
6. TO THE BEST OF OUR KNOWLEDGE, NO GRAVE SITES OR STRUCTURES MARKING A BURIAL SITE ARE PRESENT ON THE SUBJECT PROPERTY.
7. TO BEST OF OUR KNOWLEDGE NO HAZARDOUS OR TOXIC SUBSTANCES ARE KNOWN TO EXIST ON THE SUBJECT PROPERTY.
8. EX. 2 STORY SCHOOL, 2 STORY ADD'N W/CELLARS AND 2 TEMP. MODULAR CLASSROOM BUILDINGS CURRENTLY EXIST ON THE PROPERTY. THESE STRUCTURES ARE TO REMAIN.
9. THE ENTIRE SUBJECT PROPERTY IS LOCATED WITHIN AN RMA ZONE. NO FLOODPLAIN, R.P.A. OR ENVIRONMENTAL QUALITY CORRIDOR CURRENTLY EXISTS ON THIS PROPERTY.
10. THERE IS A SIDEWALK ALONG THE FRONTAGE OF BALLS HILL ROAD AND AN EXISTING TRAIL ALONG THE SOUTH SIDE OF BALLS HILL ROAD.
11. NO LIMITS OF CLEARING AND GRADING ARE PROPOSED.
12. NO ARCHITECTURAL SKETCHES OF TYPICAL PROPOSED STRUCTURES ARE PROPOSED.
13. DEVELOPMENT WILL COMMENCE UPON COMPLETION OF REQUIRED FAIRFAX COUNTY PLAN PROCESSING AND APPROVALS.
14. THE DEVELOPMENT CONFORMS TO THE PROVISIONS OF ALL APPLICABLE STANDARDS WITH THE EXCEPTION OF WAIVERS AND MODIFICATIONS REQUESTED ABOVE.
15. LANDSCAPING SHALL BE AS GENERALLY DEPICTED ON THE PLAT. REVISIONS TO THE CONCEPTS PRESENTED ON THIS PLAT SHALL BE PERMITTED IN ACCORDANCE WITH SECT. 9-004(4) OF THE FAIRFAX COUNTY ZONING ORDINANCE.
16. ADDITIONAL SITE FEATURES SUCH AS SIGNS, LIGHTS, AND/OR RETAINING WALLS NOT REPRESENTED HEREON MAY BE PROVIDED.
17. NO ADDITIONAL IMPROVEMENTS TO THE PUBLIC RIGHT(S) OF WAY ON OR ADJACENT TO THE SUBJECT PROPERTY ARE PROPOSED WITH THIS DEVELOPMENT.
18. THE PROPOSED DEVELOPMENT ON THE SUBJECT PROPERTY WILL NOT POSE ANY ADVERSE EFFECT ON ADJACENT OR NEIGHBORING PROPERTIES.
19. PARKING WILL BE PROVIDED IN ACCORDANCE WITH THE PROVISIONS OF ARTICLE 11 OF THE ZONING ORDINANCE AND THIS PLAT.
20. SIGNAGE WILL BE PROVIDED IN ACCORDANCE WITH THE PROVISIONS OF ARTICLE 12 OF THE ZONING ORDINANCE.
21. TO THE BEST OF OUR KNOWLEDGE, THERE ARE NO UTILITY EASEMENTS 25' WIDE OR MAJOR UNDERGROUND UTILITY EASEMENT ON THIS PROPERTY.
22. OUTDOOR LIGHTING SHALL MEET THE REQUIREMENTS OF THE ZONING ORDINANCE AND THE SPECIAL PERMIT.
23. THE APPLICANT RESERVES THE RIGHT TO PROVIDE ONLY THE PARKING REQUIRED BY ARTICLE ARTICLE 11 OF THE ZONING ORDINANCE ON THIS PROPERTY IN THE FUTURE.
24. THE PARKING CALCULATIONS ARE BASED ON AN ESTIMATED TOTAL POSSIBLE NUMBER OF STUDENTS IN EACH GRADE LEVEL. THE APPLICANT RESERVES THE RIGHT TO RE-DISTRIBUTE THE NUMBER OF STUDENTS AND FACULTY BETWEEN HIGH SCHOOL AND THE INTERMEDIATE SCHOOL WITHIN THE TOTAL NUMBER OF 300 STUDENTS PERMITTED UNDER THE SEA, PROVIDED THE MINIMUM NUMBER OF PARKING SPACES REQUIRED BY SECT. 11-106(17) AND SECT. 11-106(18) OF THE FAIRFAX COUNTY ZONING ORDINANCE SHALL BE MAINTAINED AT ALL TIMES.
25. AN EVM PLAN IS NOT REQUIRED PER ARTICLE 9-011(2)M OF THE FAIRFAX COUNTY ZONING ORDINANCE. THE SPORTS COURTS SHOWN HEREON SHALL BE CONSTRUCTED UPON AN EXISTING PAVED IMPERVIOUS PARKING SURFACE AND THEREFORE NO LAND DISTURBANCE ACTIVITY IN ACCESS OF 2,500 SF SHALL OCCURE. THE EXISTING VEGETATION SHOWN ON THE PLAT IS TO REMAIN EXCEPT WHERE NOTED TO BE REMOVED WHEN TEMPORARY CLASSROOMS ARE REMOVED.

VIKA

ENGINEERS ■ PLANNERS ■ LANDSCAPE ARCHITECTS ■ SURVEYORS ■ GPS SERVICES

VIKA INCORPORATED

8180 GREENSBORO DRIVE, SUITE 200 ■ McLEAN, VIRGINIA 22102

(703) 442-7800 ■ FAX (703) 761-2787

GERMANTOWN, MD

Application No. PCA 2004-DR-023-2 Staff

APPROVED DEVELOPMENT PLAN

(DP) (GDP) (CDP) (FDP)

SEE PROFFERS DATED 6-1-07

Date of (BOS) (PC) approval 6-18-07

Sheet 1 of 3

OAKCREST SCHOOL

DEED BOOK 11497 PAGE 0975

KNOWN AS BALLS HILL CHURCH

DRANESVILLE DISTRICT

FAIRFAX COUNTY, VIRGINIA

Application No. SEA 00-D-006-3 Staff

APPROVED SE / SP PLAN

SEE DEV CONDS DATED 4-26-07

Date of (BOS) (BZA) approval 6-18-07

Sheet 1 of 3

SPECIAL EXCEPTION AMENDMENT/GENERALIZED DEVELOPMENT PLAN AND PROFFER AMENDMENT

VIKA REVISIONS

REVISED
JUNE 16, 2006
SEPTEMBER 5, 2006
NOVEMBER 20, 2006
DECEMBER 22, 2006
JANUARY 8, 2007
JANUARY 24, 2007

RECEIVED Department of Planning & Zoning JAN 2 5 2007 Zoning Evaluation Division

DATE: APRIL 25, 2006	
CK'D JFA	DWN. RJB
SCALE: 1" = 50'	
PROJECT/FILE NO. 6324	
SHEET NO. 1 of 3	

P:\LDD3\Projects\6324\DWG\6324202.022706SEdwg.dwg 4/25/06 7:32:04 AM EST

BMP Facility Design Calculations

Plan Name: McLEAN BIBLE CHURCH Date: 3-25-95
Plan Number: 6602-SP-03 Engineer: CSA

I. Water Quality Narrative

THIS SITE CONSISTS OF A 5.46 ACRE PROPERTY WITH AN EXISTING CHURCH AND ANCILLARY ASPHALT PARKING LOTS. 4.96 ACRES OF THE SITE IS TO BE DEVELOPED AND 0.50 ACRES IS TO REMAIN UNDISTURBED QUALIFIED OPEN SPACE. 4.43 ACRES OF ON-SITE AND 1.69 ACRES OF OFFSITE AREA DRAIN TO THE EXISTING DRY POND. 0.53 DEVELOPED ACRES AND THE 0.50 ACRES OPEN SPACE DRAIN UNCONTROLLED FROM THE SITE. THIS BMP FACILITY IS PRIVATELY OWNED AND MAINTAINED AND WILL BE RETRO-FITTED AS PART OF THIS DEVELOPMENT PLAN. THE SITE IS LOCATED IN A RESOURCE MANAGEMENT AREA OUTSIDE OF THE OCCOQUAN WATERSHED; THEREFORE, 40% PHOSPHOROUS REMOVAL IS REQUIRED. OFFSITE AREAS ARE CONTROLLED BY THIS FACILITY

II. Watershed Information

Part 1: List all of the Subareas and "C" Factors used in the BMP Computations

Subarea Designation and Description (1)	"C" (2)	Acres (3)
ON-1 (PARKING LOT & BLDG. AREA TO POND)	0.75	4.13
ON-2 (DRIVEWAY ENTR. - UNCONTROLLED)	0.90	0.03
ON-3 (NORTHERN PARKING LOT - UNCONTROLLED)	0.67	0.50
ON-4 (UNDISTURBED OPEN SPACE - UNCONTROLLED)	0.35	0.50
ON-5 (BMP POND AREA)	0.35	0.30
OFF-1 (VDOT R/W)	0.40	1.69

NOTE: Rational formula "C" factors are taken from the general zoning values listed in Appendix 4-1 or 4-2 depending on the location of the BMP facility (Fairfax County Public Facilities Manual Chart A6-19 or Prince William County Design and Construction Standards Manual, Exhibit 1).

Part 2: Compute the Weighted Average "C" Factor for the Site

(A) Area of the site (a) 5.46 acres

(B)

Subarea Designation (1)	"C" (2)		Acres (3)		Product (4)
ON-1	0.75	X	4.13	=	3.10
ON-2	0.90	X	0.03	=	0.03
ON-3	0.67	X	0.50	=	0.34
ON-4	0.35	X	0.50	=	0.18
ON-5	0.35	X	0.30	=	0.11

(b) Total = 3.76

(C) Weighted average "C" factor (b) / (a) = (c) 0.69

Part 3: Compute the Total Phosphorus Removal for the Site

Subarea Designation (1)	BMP Type (2)	Removal Eff. (%) (3)		Area Ratio (4)		"C" Factor Ratio (5)		Product (6)
ON-1	DRY POND	40	X	4.13/5.46	X	0.75/0.69	=	32.89
ON-2	UNCONTROLLED	—	X	—	X	—	=	—
ON-3	UNCONTROLLED	—	X	—	X	—	=	—
ON-4	OPEN SPACE	100	X	0.50/5.46	X	0.35/0.69	=	4.65
ON-5	DRY POND	40	X	0.30/5.46	X	0.35/0.69	=	1.11
OFF-1	DRY POND	40	X	0.2(1.69)/5.46	X	0.40/0.69	=	1.44

(a) Total = 40.09 %

Part 4: Determine Compliance with Phosphorus Removal Requirement

(A) Select Requirement (a) 40%

- Water Supply Overlay District (Occoquan Watershed) = 50% (Fairfax County and Prince William County)
- Chesapeake Bay Preservation Area (New Development) = 40% (Fairfax County) 50% (Prince William County)
- Chesapeake Bay Preservation Area (Redevelopment) = [1-0.9 x ("I"pre / "I"post)] x 100 = __%

(B) If Line 3(a) 40.09% ≥ Line 4(a) 40% then Phosphorus removal requirement is satisfied.

IV. Site Coverage

Part 5: Determine Compliance with Site Coverage Requirement

Sum all the uncontrolled onsite areas and compute a weighted average "C" factor. Do not include qualifying open space.

Subarea Designation (1)	"C" (2)		Acres (3)		Product (4)
ON-2	0.90	X	0.03	=	0.03
ON-3	0.67	X	0.50	=	0.34

(A) Total equivalent uncontrolled area (a) Total = 0.37

(B) Total uncontrolled area (b) 0.53

(C) Weighted average "C" factor (a)/(b) = (c) 0.70

(D) If Line 5(b) < 20% of Line 2(a), then the site coverage requirement is satisfied. Line 5(a) is the equivalent offsite area for which coverage may be required.

100 x Line 5(b) 0.53 / Line 2(a) 5.46 = (d) 9.71 %

Part 6: Determine the Offsite Areas for which Coverage is Required

(A) For the offsite areas listed in Part 1 which flow to proposed onsite BMPs compute the equivalent areas.

Subarea Designation (1)	"C" (2)		Acres (3)		Product (4)
OFF-1 (VDOT R/W)	0.40	X	0.2(1.69)	=	0.14

(a) Total = 0.14

V. Storage

Part 7: Compute The Weighted Average "C" Factor for Each Proposed BMP Facility

(A) List the areas to be controlled by the proposed BMP.

Subarea Designation (1)	"C" (2)		Acres (3)		Product (4)
ON-1	0.75	X	4.13	=	3.10
ON-5	0.35	X	0.30	=	0.11
OFF-1	0.40	X	0.2(1.69)	=	0.14

(a) 4.77

(B) (b) 3.35

(C) Weighted average "C" factor (b)/(a) = (c) 0.70

Part 8: Determine the Storage Required for Each Proposed Facility

(A) Extended Detention Dry Pond
Chart A6-40 value (Appendix 4-3) for BMP storage per acre
[(4375 x "C") - 875] or [31.25 x %Imp.] = (a) 2188 cf/ac

- Design 1 (48 hour drawdown)
Line 7(a) 4.77 x Line 8(a) 2188 = 10,437 cf

VI. Outlet Computation

Part 9: Determine The Required Orifice Size for Each Extended Detention Facility

(A) BMP storage requirement (S) from Part 8. (a) 10,437

(B) Maximum Head (h) at the required BMP storage from the elevation-storage curve for the facility. (b) 3.07

(C) Peak outflow rate (Q_p) at the maximum head for a drawdown time of 48 hrs [$Q_p = S/(0.5 \times 3600 \times 48)$].
0.0000116 x Line 9(a) 10,437 = (c) 0.121

(D) Required orifice area (A) [$A = Q_p / (0.6 \times (64.4 \times h)^{0.5})$]
Line 9(c) 0.121 / [0.6 x (64.4 x Line 9(b) 3.07)$^{0.5}$] = (d) 0.0143

(E) Diameter of a circular orifice.
2.0 x (Line 9(d) 0.0143 / 3.1415927)$^{0.5}$ = (e) 0.1351 FT = 1.62 IN.

=> REPLACE EXISTING PLATE WITH A NEW PLATE USING ONE HOLE, 1.62 INCHES IN DIAMETER.

MINIMUM STORMWATER INFORMATION FOR REZONING, SPECIAL EXCEPTION, SPECIAL PERMIT AND DEVELOPMENT PLAN APPLICATIONS

The following information is required to be shown or provided in all zoning applications, or a waiver request of the submission requirement with justification shall be attached. Note: Waivers will be acted upon separately. Failure to adequately address the required submission information may result in a delay in processing this application.

This information is required under the following Zoning Ordinance paragraphs:
Special Permits (8-011 2J & 2L) Special Exceptions (9-011 2J & 2L)
Cluster Subdivision (9-615 1G & 1N) Commercial Revitalization Districts (9-622 2A (12) & (14))
Development Plans PRC District (16-302 3 & 4L) PRC Plan (16-303 1E & 1O)
FDP P Districts (except PRC) (16-502 1F & 1Q) Amendments (18-202 10F & 10I)

☒ 1. Plat is at a minimum scale of 1"=50' (unless it is depicted on one sheet with a minimum scale of 1"=100').

☒ 2. A graphic depicting the stormwater management facility(ies) and limits of clearing and grading accommodate the stormwater management facility(ies), storm drainage pipe systems and outlet protection, pond spillways, access roads, site outfalls, energy dissipation devices, and stream stabilization measures as shown on Sheet 1,2,3.

☒ 3. Provide:

Facility Name/ Type & No. (e.g. dry pond A, infil. trench, underground vault, etc.)	On-site area served (acres)	Off-site area served (acres)	Drainage area (acres)	Dry Pond Footprint area (sf)	Storage Volume (cf)	If pond, dam height (ft)
Dry Pond	4.43Ac	1.69AC	6.12Ac	35,000SF	14,425CF	
Totals: Dry Pond	4.43Ac	1.69Ac	6.12Ac	35,000SF	14,425CF	

☒ 4. Onsite drainage channels, outfalls and pipe systems are shown on Sheet Sheet 1
Pond inlet and outlet pipe systems are shown on Sheet Sheet 1.

☒ 5. Maintenance access (road) to stormwater management facility(ies) are shown on Sheet N/A (MAINTAINED FROM LOT)
Type of maintenance access road surface noted on the plat is N/A (asphalt, geoblock, gravel, etc.).

☒ 6. Landscaping and tree preservation shown in and near the stormwater management facility is shown on Sheet 1.

☒ 7. A 'stormwater management narrative' which contains a description of how detention and best management practices requirements will be met is provided on Sheet 2+3

☒ 8. A description of the existing conditions of each numbered site outfall extended downstream from the site to a point which is at least 100 times the site area or which has a drainage area of at least one square mile (640 acres) is provided on Sheet N/A

☒ 9. A description of how the outfall requirements, including contributing drainage areas of the Public Facilities Manual will be satisfied is provided on Sheet Sheet 2+3

☒ 10. Existing topography with maximum contour intervals of two (2) feet and a note as to whether it is an air survey or field run is provided on Sheets Sheet 1.

☒ 11. A submission waiver is requested for N/A

☒ 12. Stormwater management is not required because No additional impervious surface Area is being created w/this application

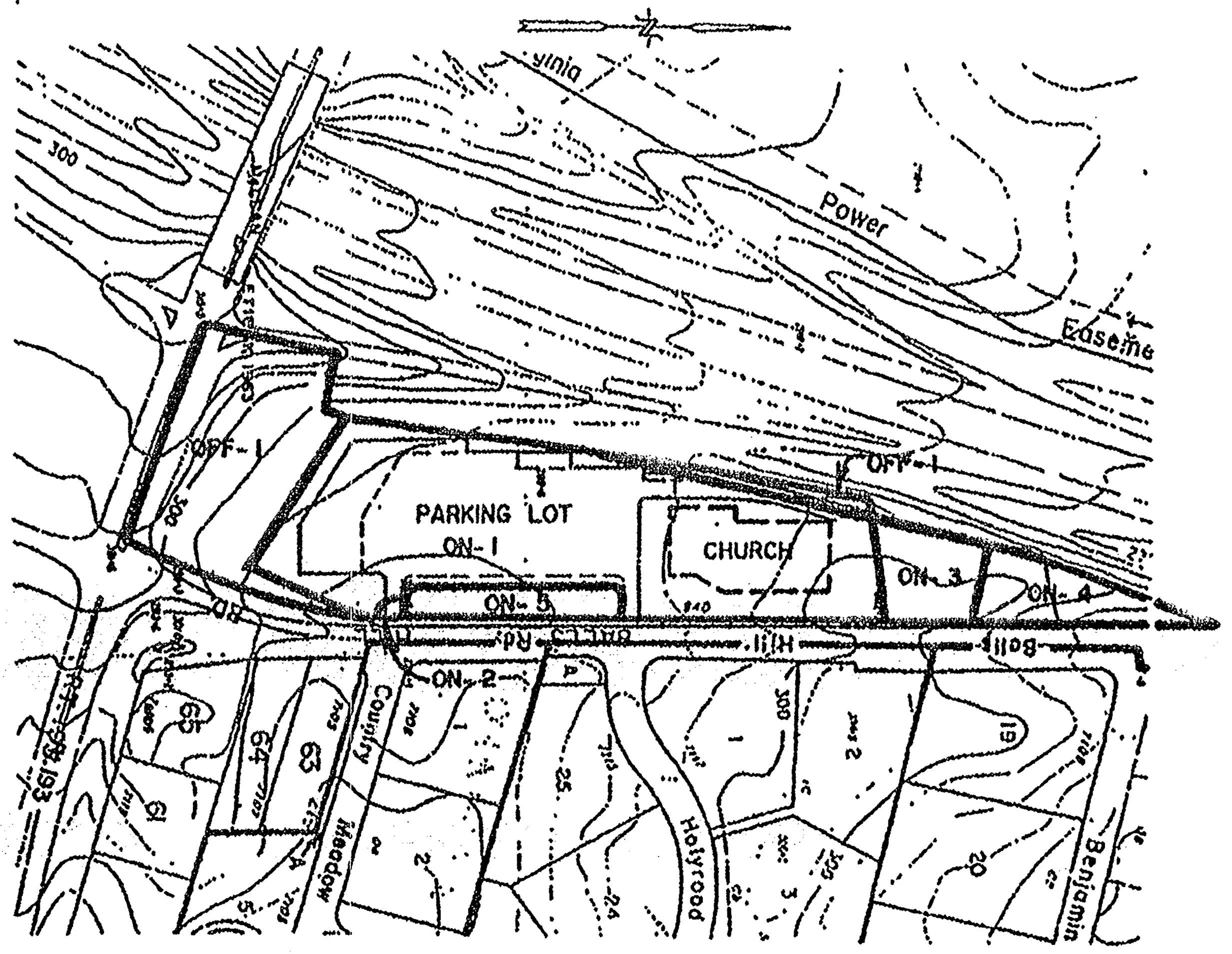

BMP DRAINAGE DIVIDES TO SWM POND
SCALE: 1"= 200'

AS BUILT PLANS WERE PREPARED BY:
COLDWELL AND ASSOCIATES, P. C.
11244 WAPLES MILL ROAD, SUITE F2
FAIRFAX VIRGINIA 22030 (703)591-0055

In accordance with the Fairfax County Zoning Ordinance, Chapter 112, Article XVIII, Part 8, 18-802, and the Code of the County of Fairfax, Chapter 101-2-6, Paragraph (d)(5)(B) I, John M. Coldwell, P.E., L.S., do hereby certify that this as-built conforms to the approved plan, except as shown, which represents actual conditions on this site as of this date.

Storm sewer structures fall within their respective easements and all dedications are recorded in easement DB 7752 PG 1259.

COMMONWEALTH OF VIRGINIA JOHN M. COLDWELL No. 1978 1-26-96 LAND SURVEYOR

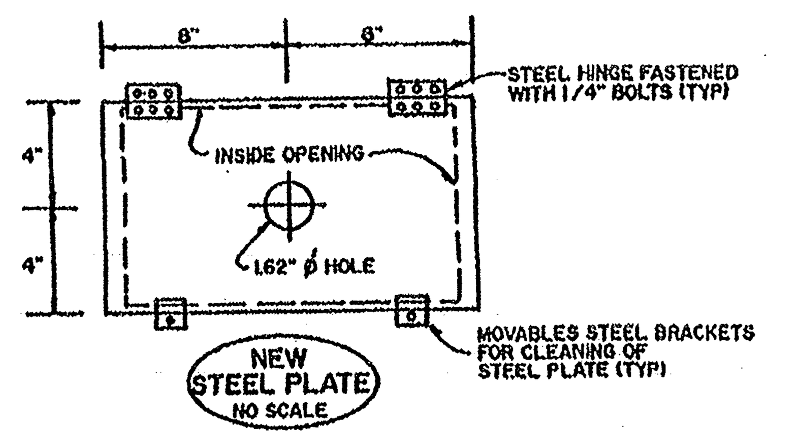

NEW STEEL PLATE
NO SCALE

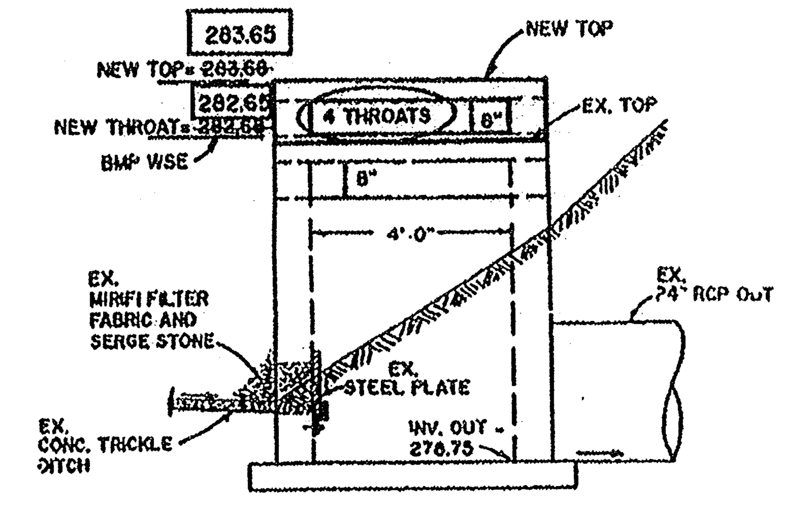

ELEVATION VIEW B-B

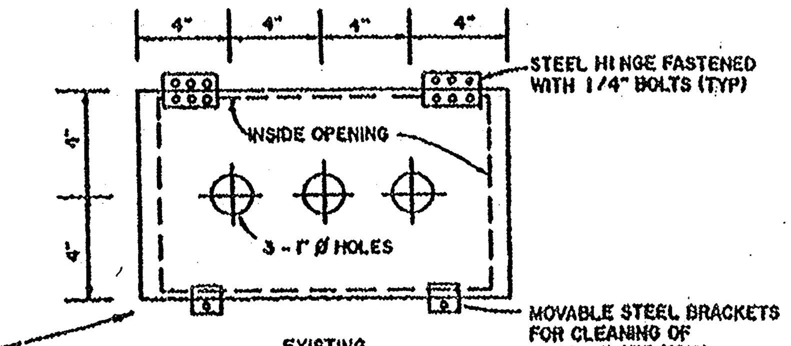

EXISTING
DETAIL STEEL PLATE
NO SCALE

STRUCTURE A 3 MODIFICATIONS

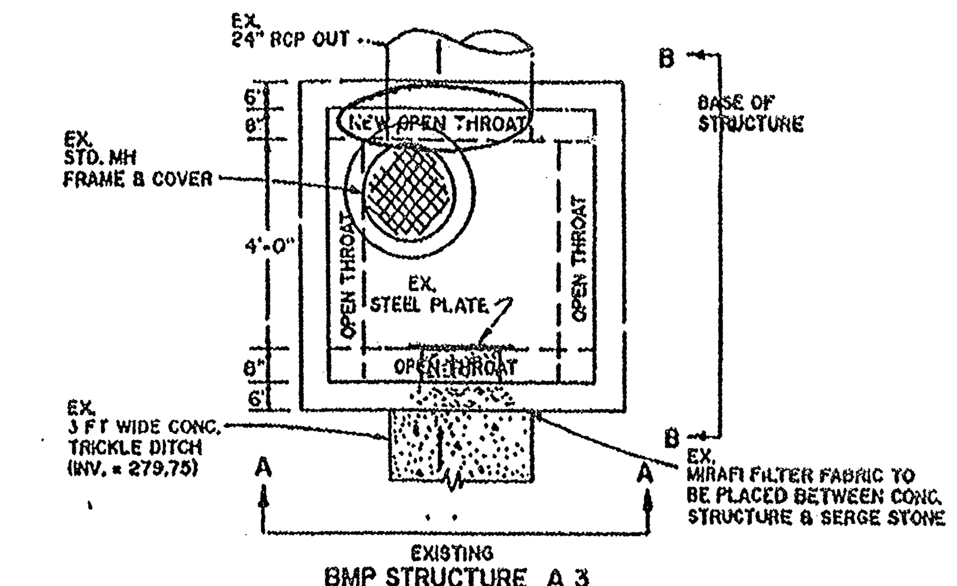

EXISTING
BMP STRUCTURE A 3
(MODIFIED YARD INLET)
NO SCALE

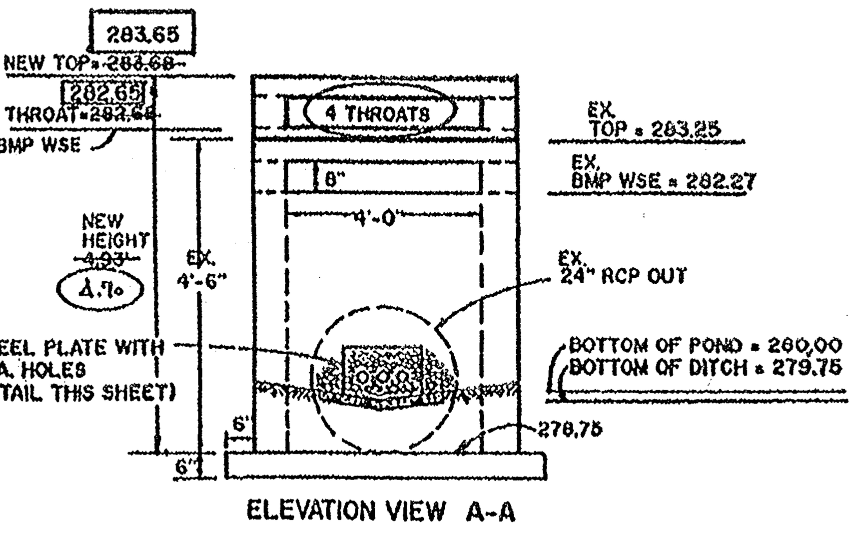

ELEVATION VIEW A-A

NOTE:
STRUCTURE A3 IS TO BE MODIFIED BY RAISING THE TOP AND THROAT 0.43 FEET AND PROVIDING FOUR (4) THROATS. THE STEEL PLATE IS TO BE REPLACED.

AS BUILT

COLDWELL, SIKES & ASSOCIATES
ENGINEERING, PLANNING, SURVEYING
FAIRFAX, VIRGINIA
(703) 591-0055

BMP COMPUTATIONS & DETAILS

McLEAN BIBLE CHURCH
DRANESVILLE DISTRICT
FAIRFAX COUNTY, VIRGINIA

COMMONWEALTH OF VIRGINIA JOHN M. COLDWELL No. 951 PROFESSIONAL ENGINEER

REVISIONS

SURVEY: OTHERS	CHECKED: JMC
DESIGN: RA	DATE: 3/24/95
DRAWN: MR	SCALE: N/A
FILE: 1002-IA-0	
SHEET 9	OF 15

Application No. SEA00-D-006-3 Staff C. Lewis
APPROVED (SE) / SP PLAN
SEE DEV CONDS DATED 4-26-07
Date of (BOS) (BZA) approval 6-18-07
Sheet 2 of 3

THIS SHEET FOR INFORMATION ONLY

COMMONWEALTH OF VIRGINIA JOHN F. AMATETTI No. 1447 5/17/05 PROFESSIONAL ENGINEER

SHEET 2

Application No. PCA-2004-DR-022-2 Staff C. Lewis
APPROVED DEVELOPMENT PLAN
(DP) (GDP) (CDP) (FDP)
SEE PROFFERS DATED 6-1-07
Date of (BOS) (PC) approval 6-18-07
Sheet 2 of 3

2 YEAR STORM

Pond File: C:\PONDPACK\DATA5\MCLEAN .PND
Inflow Hydrograph: C:\PONDPACK\DATA5\MCLEAN2 .HYD
Outflow Hydrograph: C:\PONDPACK\DATA5\MCLEN2OT.HYD

INFLOW HYDROGRAPH / ROUTING COMPUTATIONS

TIME (min)	INFLOW (cfs)	I1+I2 (cfs)	2S/t - O (cfs)	2S/t + O (cfs)	OUTFLOW (cfs)	ELEVATION (ft)
0.0	0.00	------	0.0	0.0	0.00	280.10
5.0	21.36	21.4	21.4	21.4	0.00	281.40
10.0	13.76	35.1	56.5	56.5	0.00	282.37
15.0	10.19	24.0	72.9	80.4	3.75	282.85
20.0	8.15	18.3	74.3	91.3	8.50	282.99
25.0	6.74	14.9	74.2	89.2	7.50	282.96
30.0	5.72	12.5	74.0	86.6	6.29	282.93
35.0	5.02	10.7	[illegible]	84.8	5.42	282.91
40.0	4.31	9.3	73.7	83.3	4.77	282.89
45.0	3.92	8.2	73.4	81.9	4.30	282.87
50.0	3.49	7.4	73.0	80.8	3.87	282.85
55.0	3.21	6.7	72.7	79.7	3.49	282.84
60.0	2.90	6.1	72.5	78.8	3.18	282.83
65.0	2.67	5.6	72.3	78.1	2.89	282.81
70.0	2.43	5.1	72.1	77.4	2.64	282.80
75.0	2.20	4.6	71.9	76.7	2.41	282.79
80.0	1.92	4.1	71.7	76.0	2.16	282.78
85.0	1.69	3.6	71.5	75.3	1.90	282.77
90.0	1.45	3.1	71.3	74.7	1.66	282.76
95.0	1.22	2.7	71.2	74.0	1.43	282.75
100.0	0.98	2.2	71.0	73.4	1.19	282.74
105.0	0.74	1.7	70.8	72.7	0.95	282.73
110.0	0.47	1.2	70.6	72.0	0.70	282.72
115.0	0.24	0.7	70.4	71.3	0.45	282.71
120.0	0.00	0.2	70.2	70.7	0.21	282.70

***** Summary of Peak Outflow and Peak Elevation *****

Peak Inflow = 21.36 cfs
Peak Outflow = 8.50 cfs
Peak Elevation = 282.99 ft

***** Summary of Approximate Peak Storage *****

Initial Storage = 0 cu-ft
Peak Storage From Storm = 12,415 cu-ft
Total Storage in Pond = 12,415 cu-ft

10 YEAR STORM

Pond File: C:\PONDPACK\DATA5\MCLEAN .PND
Inflow Hydrograph: C:\PONDPACK\DATA5\MCLEAN10.HYD
Outflow Hydrograph: C:\PONDPACK\DATA5\MCLN10OT.HYD

INFLOW HYDROGRAPH / ROUTING COMPUTATIONS

TIME (min)	INFLOW (cfs)	I1+I2 (cfs)	2S/t - O (cfs)	2S/t + O (cfs)	OUTFLOW (cfs)	ELEVATION (ft)
0.0	0.00	------	0.0	0.0	0.00	280.10
5.0	28.50	28.5	28.5	28.5	0.00	281.62
10.0	18.35	46.9	71.5	75.4	1.91	282.77
15.0	13.56	31.9	74.7	103.4	14.39	283.13
20.0	10.86	24.4	74.7	99.1	12.21	283.08
25.0	8.98	19.8	74.4	94.5	10.04	283.02
30.0	7.60	16.6	74.3	91.0	8.38	282.98
35.0	6.59	14.2	74.1	88.4	7.16	282.95
40.0	5.76	12.4	74.0	86.5	6.23	282.93
45.0	5.14	10.9	73.9	84.9	5.49	282.91
50.0	4.63	9.8	73.8	83.7	4.94	282.90
55.0	4.23	8.9	73.6	82.7	4.57	282.88
60.0	3.88	8.1	73.3	81.7	4.20	282.87
65.0	3.57	7.4	73.0	80.7	3.86	282.85
70.0	3.25	6.8	72.8	79.8	3.53	282.84
75.0	2.90	6.2	72.5	78.9	3.20	282.83
80.0	2.59	5.5	72.3	78.0	2.87	282.81
85.0	2.27	4.9	72.0	77.1	2.55	282.80
90.0	1.96	4.2	71.8	76.3	2.24	282.79
95.0	1.61	3.6	71.5	75.4	1.91	282.77
100.0	1.29	2.9	71.3	74.4	1.58	282.76
105.0	0.98	2.3	71.0	73.5	1.26	282.75
110.0	0.67	1.7	70.8	72.7	0.94	282.73
115.0	0.31	1.0	70.5	71.8	0.62	282.72
120.0	0.00	0.3	70.3	70.9	0.28	282.71

***** Summary of Peak Outflow and Peak Elevation *****

Peak Inflow = 28.50 cfs
Peak Outflow = 14.39 cfs
Peak Elevation = 283.13 ft

***** Summary of Approximate Peak Storage *****

Initial Storage = 0 cu-ft
Peak Storage From Storm = 13,358 cu-ft
Total Storage in Pond = 13,358 cu-ft

100 YEAR STORM

Pond File: C:\PONDPACK\DATA5\MCLEAN .PND
Inflow Hydrograph: C:\PONDPACK\DATA5\MCLEN100.HYD
Outflow Hydrograph: C:\PONDPACK\DATA5\MCL100OT.HYD

INFLOW HYDROGRAPH / ROUTING COMPUTATIONS

TIME (min)	INFLOW (cfs)	I1+I2 (cfs)	2S/t - O (cfs)	2S/t + O (cfs)	OUTFLOW (cfs)	ELEVATION (ft)
0.0	0.00	------	0.0	0.0	0.00	280.10
5.0	38.57	38.6	38.6	38.6	0.00	281.90
10.0	24.97	63.5	74.7	102.1	13.70	283.11
15.0	18.54	43.5	74.1	118.2	22.06	283.27
20.0	14.66	33.2	74.5	107.3	16.39	283.16
25.0	12.27	26.9	74.7	101.4	13.35	283.10
30.0	10.39	22.7	74.6	97.4	11.41	283.06
35.0	9.13	19.5	74.4	94.1	9.84	283.02
40.0	8.11	17.2	74.3	91.6	8.68	282.99
45.0	7.37	15.5	74.2	89.8	7.79	282.97
50.0	6.62	14.0	74.1	88.2	7.04	282.95
55.0	6.08	12.7	74.0	86.8	6.38	282.93
60.0	5.57	11.7	74.0	85.7	5.85	282.92
65.0	5.10	10.7	73.9	84.6	5.36	282.91
70.0	4.63	9.7	73.8	83.7	4.92	282.90
75.0	4.19	8.8	73.5	82.6	4.55	282.88
80.0	3.72	7.9	73.2	81.5	4.12	282.86
85.0	3.25	7.0	72.9	80.2	3.66	282.85
90.0	2.78	6.0	72.5	78.9	3.19	282.83
95.0	2.31	5.1	72.2	77.6	2.72	282.81
100.0	1.84	4.2	71.8	76.3	2.25	282.79
105.0	1.41	3.3	71.4	75.0	1.80	282.77
110.0	0.94	2.4	71.1	73.8	1.35	282.75
115.0	0.47	1.4	70.7	72.8	0.88	282.73
120.0	0.00	0.5	70.4	71.2	0.41	282.71

***** Summary of Peak Outflow and Peak Elevation *****

Peak Inflow = 38.57 cfs
Peak Outflow = 22.06 cfs
Peak Elevation = 283.27 ft

***** Summary of Approximate Peak Storage *****

Initial Storage = 0 cu-ft
Peak Storage From Storm = 14,425 cu-ft
Total Storage in Pond = 14,425 cu-ft

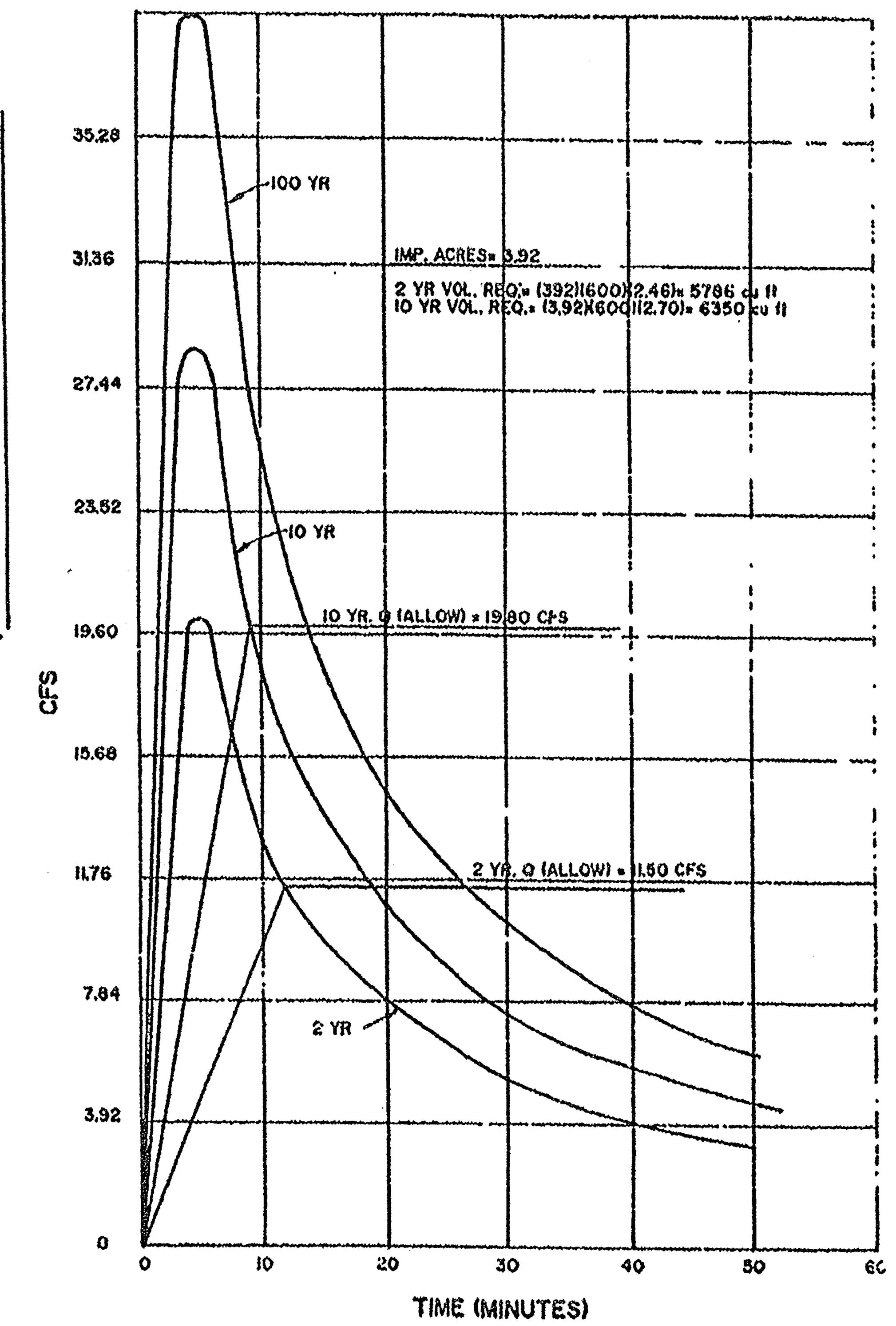

****
MCLEAN BIBLE CHURCH
PROPOSED PARKING LOT EXPANSION WITH EXISTING POND CONFIGURATION
****

Inflow Hydrograph: C:\PONDPACK\DATA5\MCLEAN2 .HYD
Rating Table file: C:\PONDPACK\DATA5\MCLEAN .PND

----INITIAL CONDITIONS----
Elevation = 280.10 ft
Outflow = 0.00 cfs
Storage = 0 cu-ft

GIVEN POND DATA / INTERMEDIATE ROUTING COMPUTATIONS

ELEVATION (ft)	OUTFLOW (cfs)	STORAGE (cu-ft)	2S/t (cfs)	2S/t + O (cfs)
280.10	0.0	0	0.0	0.0
280.30	0.0	14	0.1	0.1
280.50	0.0	116	0.8	0.8
280.70	0.0	393	2.6	2.6
280.90	0.0	931	6.2	6.2
281.10	0.0	1,773	11.8	11.8
281.30	0.0	2,703	18.0	18.0
281.50	0.0	3,681	24.5	24.5
281.70	0.0	4,707	31.4	31.4
281.90	0.0	5,783	38.6	38.6
282.10	0.0	6,909	46.1	46.1
282.30	0.0	8,076	53.8	53.8
282.50	0.0	9,286	61.9	61.9
282.68	0.0	10,411	69.4	69.4
282.70	0.1	10,538	70.3	70.4
282.90	5.0	11,833	78.9	83.9
283.10	13.1	13,179	87.9	101.0
283.30	23.4	14,612	97.4	120.8
283.50	35.6	16,142	107.6	143.2
283.70	49.4	17,772	118.5	167.9
283.90	64.7	19,505	130.0	194.7

Time increment (t) = 5.0 min.

****
MCLEAN BIBLE CHURCH
RETRO-FITTED STRUCTURE A3 TO RAISE THE THROAT ELEVATIONS TO 282.68 AND ADDED A FOURTH THROAT
****

>>>>>> Structure No. 1 <<<<<<
(Input Data)

WEIR-VR
Weir - Vertical Rectangular

E1 elev.(ft)? 282.68
E2 elev.(ft)? 284.0
Weir coefficient? 3
Weir elev.(ft)? 282.68
Length (ft)? 16
Contracted/Suppressed (C/S)? S

DETENTION COMPUTATIONS

PRE-DEVELOPMENT RUNOFF (PRIOR TO SITE PLAN 6622-SP-02)
SITE AREA = 5.46 AC.

C_2 = 0.15

C_w = (1.52 AC. x C = 0.9) + (3.94 AC. x C_{10} = 0.3) / 5.46 AC. =

C_2 = 0.36 AND C_{10} = 0.47

TC = 5 MIN.

RAINFALL INTENSITY: 2 YR. I_2 = 5.45
10 YR. I_{10} = 7.27

RUNOFF: Q_2 = (0.36) (5.45) (5.46) = 10.7 CFS
Q_{10} = (0.47) (7.27) (5.46) = 18.7 CFS

POST DEVELOPMENT RUNOFF (INCL. SITE PLAN 6622-SP-02 AND PROPOSED CONSTRUCTION)
SITE AREA = 5.46 AC.

C_w = (3.47 AC. x C = 0.9) + (1.19 AC. x C = 0.3) + (0.80 AC. x 0.35) / 5.46 AC. = 0.69

TC = 5 MIN.

RAINFALL INTENSITY: 2 YR. I_2 = 5.45
10 YR. I_{10} = 7.27

RUNOFF: Q_2 = (0.69) (5.45) (5.46) = 20.5 CFS
Q_{10} = (0.69) (7.27) (5.46) = 27.4 CFS

DETENTION REQUIRED
2 YR. STORM = 20.5 - 10.7 = 9.8 CFS
10 YR. STORM = 27.4 - 18.7 = 8.7 CFS

ACTUAL RUNOFF TO POND
ONSITE : 3.13 AC. @ C = 0.9
1.00 AC. @ C = 0.3
0.30 AC. @ C = 0.35

OFFSITE: 0.27 AC. @ C = 0.9
1.42 AC. @ C = 0.3

TOTAL : 6.12 AC.

C_w = (3.40 x 0.9) + (2.42 x 0.3) + (0.30 x 0.35) / 6.12 AC. = 0.64

TC = 5 MIN.

RAINFALL INTENSITY: 2 YR. I_2 = 5.45
10 YR. I_{10} = 7.27

RUNOFF: Q_2 = (0.64) (5.45) (6.12) = 21.3 CFS
Q_{10} = (0.64) (7.27) (6.12) = 28.5 CFS

DISCHARGE (CFS)

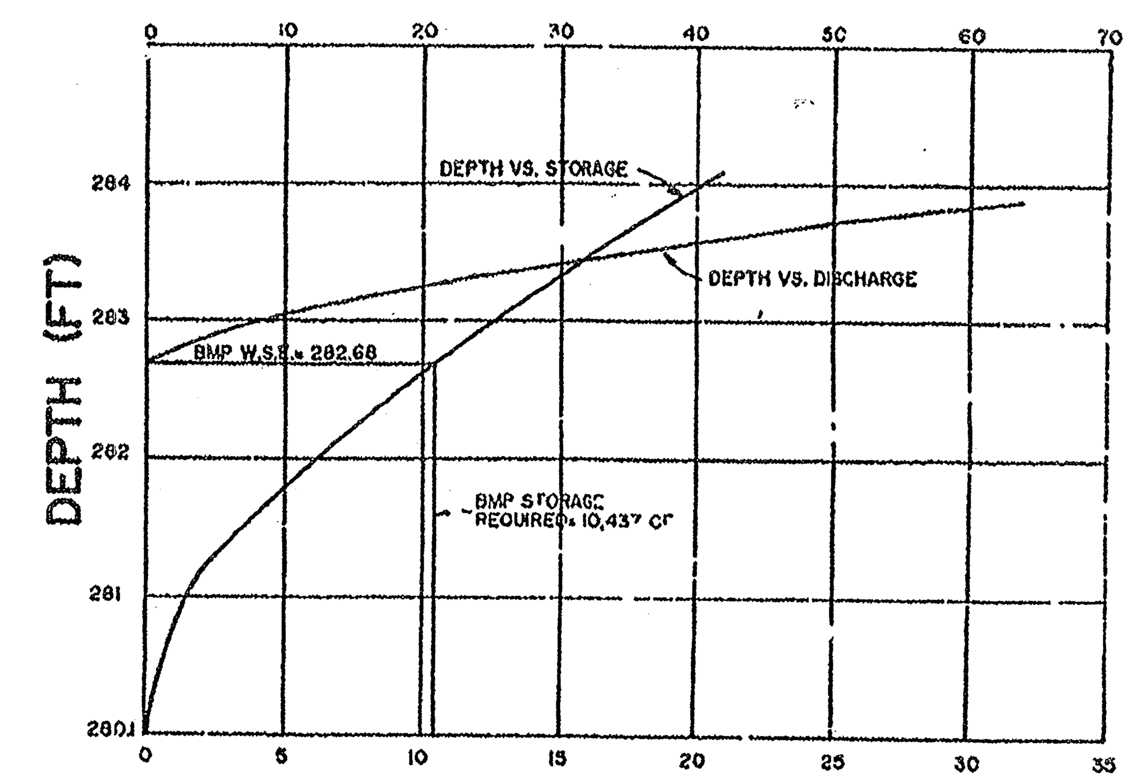

STORAGE (CF)

STORM SEWER OUTFALL NARRATIVE

THIS PROPOSED ADDITION OF 0.60 ACRES OF PARKING AREA DRAINS INTO THE EXISTING ONSITE STORMWATER MANAGEMENT POND. THE OUTFLOW OF THE POND DRAINS INTO AN EXISTING 21 INCH STORM SEWER LINE WHICH IS THE UPPER PART OF A CLOSED STORM SEWER SYSTEM. THE INCREASED RUNOFF REQUREMENTS AND BMP REQUIREMENTS ARE MET, BY MODIFYING THE EXISTING CONTROL STRUCTURE # A-3.

AS BUILT PLANS WERE PREPARED BY:
COLDWELL AND ASSOCIATES, P. C.
11244 WAPLES MILL ROAD, SUITE F2
FAIRFAX VIRGINIA 22030 (703)591-0055

In accordance with the Fairfax County Zoning Ordinance, Chapter 112, Article XVIII, Part 8, 18-602, and the Code of the County of Fairfax, Chapter 101-2-6, Paragraph (d) (5) (B) I, John M. Coldwell, P.E., L.S., do hereby certify that this as-built conforms to the approved plan, except as shown, which represents actual conditions on this site as of this date.

Storm sewer structures fall within their respective easements and all dedications are recorded in easement DB 7752 PG 1259.

NO CHANGES WERE MADE TO THE STORM WATER MANAGEMENT POND EXCEPT THE MODIFICATIONS TO THE CONTROL STRUCTURE A-3 (SEE SH # 9)

COMMONWEALTH OF VIRGINIA JOHN M. COLDWELL No. 1778 1-16-06 LAND SURVEYOR

COMMONWEALTH OF VIRGINIA JOHN F. AMATETTI No. 11447 5/17/05 PROFESSIONAL ENGINEER

THIS SHEET FOR INFORMATION ONLY

AS BUILT

COLDWELL, SIKES & ASSOCIATES
ENGINEERING, PLANNING, SURVEYING
FAIRFAX, VIRGINIA
(703) 591-0055

STORMWATER DETENTION COMPUTATIONS

McLEAN BIBLE CHURCH
DRANESVILLE DISTRICT
FAIRFAX COUNTY, VIRGINIA

COMMONWEALTH OF VIRGINIA JOHN M. COLDWELL PROFESSIONAL ENGINEER

REVISIONS:

SURVEY: OTHERS	CHECKED: JMC
DESIGN: RA	DATE: 3/24/95
DRAWN: MR	SCALE: N/A
FILE: 1002-IA-0	
SHEET 10 OF 15	

Application No. SEA00-D-006-3 Staff C. Lewis
APPROVED (SE) / SP PLAN
SEE DEV CONDS DATED 4-26-07
Date of (BOS) (BZA) approval 6-18-07
Sheet 3 of 3

Application No. PCA2004-DR-023-2 Staff C. Lewis
APPROVED DEVELOPMENT PLAN
(DP) (GDP) (CDP) (FDP)
SEE PROFFERS DATED 6-1-07
Date of (BOS) (PC) approval 6-18-07
Sheet 3 of 3